Cat. No. W153-E1-04

SYSMAC

C200H-IDS01-V1/IDS21

ID Sensor

OPERATION MANUAL

OMRON

C200H-IDS01-V1/IDS21 ID Sensor Operation Manual

Revised May 2003

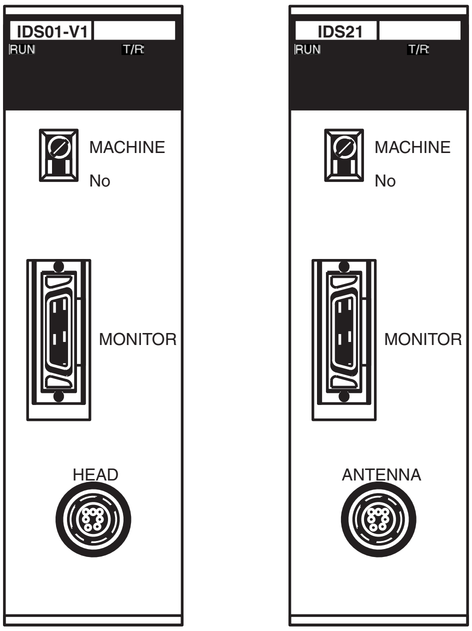
IDS01-V1
RUN
T/R
MACHINE
No
MONITOR
HEAD
IDS21
RUN
T/R
MACHINE
No
MONITOR
ANTENNA

Notice:

OMRON products are manufactured for use according to proper procedures by a qualified operator and only for the purposes described in this manual.

The following conventions are used to indicate and classify precautions in this manual. Always heed the information provided with them. Failure to heed precautions can result in injury to people or damage to property.

⚠ **DANGER**	Indicates an imminently hazardous situation which, if not avoided, will result in death or serious injury.
⚠ **WARNING**	Indicates a potentially hazardous situation which, if not avoided, could result in death or serious injury.
⚠ **Caution**	Indicates a potentially hazardous situation which, if not avoided, may result in minor or moderate injury, or property damage.

OMRON Product References

All OMRON products are capitalized in this manual. The word “Unit” is also capitalized when it refers to an OMRON product, regardless of whether or not it appears in the proper name of the product.

The abbreviation “Ch,” which appears in some displays and on some OMRON products, often means “word” and is abbreviated “Wd” in documentation in this sense.

The abbreviation “PC” means Programmable Controller and is not used as an abbreviation for anything else.

Visual Aids

The following headings appear in the left column of the manual to help you locate different types of information.

Note Indicates information of particular interest for efficient and convenient operation of the product.

1,2,3... 1. Indicates lists of one sort or another, such as procedures, checklists, etc.

© OMRON, 1990

All rights reserved. No part of this publication may be reproduced, stored in a retrieval system, or transmitted, in any form, or by any means, mechanical, electronic, photocopying, recording, or otherwise, without the prior written permission of OMRON.

No patent liability is assumed with respect to the use of the information contained herein. Moreover, because OMRON is constantly striving to improve its high-quality products, the information contained in this manual is subject to change without notice. Every precaution has been taken in the preparation of this manual. Nevertheless, OMRON assumes no responsibility for errors or omissions. Neither is any liability assumed for damages resulting from the use of the information contained in this publication.

TABLE OF CONTENTS

PRECAUTIONS xi

1 Intended Audience xii

2 General Precautions xii

3 Safety Precautions xii

4 Operating Environment Precautions xiii

5 Application Precautions xiii

SECTION 1
System Description and Installation 1

1-1 System Description 2

1-2 Features 3

1-3 Components and Indicators 5

1-4 System Configuration 6

1-5 System Connections 7

1-6 Maximum Distance Between ID Sensor Unit and R/W Head 9

1-7 Maximum Distance Between ID Sensor Unit and R/W Antenna 9

SECTION 2
Operation 11

2-1 Switch Settings 12

2-2 Word Settings 13

2-3 The User Program 17

SECTION 3
Programming 39

3-1 Program Examples 40

3-2 Monitoring 51

3-3 Timing Considerations 70

SECTION 4
Troubleshooting 73

4-1 Periodic Maintenance 74

4-2 What To Do If a Malfunction Occurs 74

4-3 Diagnostic Flowcharts 75

Appendices

A Specifications 77

B Standard Models 81

C ASCII Code List 83

D Using the C200H ID Sensor Unit with CS1-series PCs 85

TABLE OF CONTENTS

Glossary **89**

Index **91**

Revision History **95**

About this Manual:

This manual explains the operation of two non-contact information detection systems: C200H–IDS01–V1 Electromagnetic Inductor ID Sensor Unit and C200H–ID21 Microwave ID Sensor Unit. Both Units, having long-range sensing capabilities, can read information from or write information to a Data Carrier mounted to a moving work piece. Refer to separate manuals for specifications and operation of the R/W Heads and Data Carriers. The table below shows a list of manuals available for the V600/V620 FA ID System.

Name	Catalog no.
Handheld ID Controller Operation Guide	Z43
V600 FA ID System Serial Interface Operation Manual	Z44
V600 FA ID System Parallel Interface Operation Manual	Z45
FA ID System V620 ID System with Serial Interface System Manual	Z68
FA ID System V620 ID System with Parallel Interface System Manual	Z69
V600/620 FA ID System Operation Manual	Z83
V600 FA ID System R/W Heads and SRAM Data Carriers Operation Manual	Z95
V600 FA ID System R/W Heads and EEPROM Data Carriers Operation Manual	Z96
V600 FA ID System R/W Heads and SRAM Data Carriers Supplement	Z98
V600 FA ID System R/W Heads and EEPROM Data Carriers Supplement	Z99

Before operating an ID Sensor Unit, thoroughly familiarize yourself with both the Unit and this manual.

Section 1 describes the features, components, configuration, and installation of the ID Sensor systems.

Section 2 describes operation of the ID Sensor Units, and covers switch settings, bit allocation, and communication commands, and introduces the user program.

Section 3 describes programming and includes example programs that illustrate data transfer between the Unit and the CPU. Monitoring functions and timing considerations are also covered in this section.

Section 4 contains information on maintenance and troubleshooting.

Four ***Appendices*** provide information on specifications and standard models, and also includes an ASCII code list.

⚠ **WARNING** Failure to read and understand the information provided in this manual may result in personal injury or death, damage to the product, or product failure. Please read each section in its entirety and be sure you understand the information provided in the section and related sections before attempting any of the procedures or operations given.

PRECAUTIONS

This section provides general precautions for using the C500-IDS□□ ID Sensors and related devices.

The information contained in this section is important for the safe and reliable application of C500-IDS□□ ID Sensors. You must read this section and understand the information contained before attempting to set up or operate a PC system.

1 Intended Audience xii
2 General Precautions xii
3 Safety Precautions xii
4 Operating Environment Precautions xiii
5 Application Precautions xiii

1 Intended Audience

This manual is intended for the following personnel, who must also have knowledge of electrical systems (an electrical engineer or the equivalent).

- Personnel in charge of installing control devices.
- Personnel in charge of designing control systems.
- Personnel in charge of managing control systems and facilities.

2 General Precautions

The user must operate the product according to the performance specifications described in the operation manuals.

Before using the product under conditions which are not described in the manual or applying the product to nuclear control systems, railroad systems, aviation systems, vehicles, combustion systems, medical equipment, amusement machines, safety equipment, and other systems, machines, and equipment that may have a serious influence on lives and property if used improperly, consult your OMRON representative.

Make sure that the ratings and performance characteristics of the product are sufficient for the systems, machines, and equipment, and be sure to provide the systems, machines, and equipment with double safety mechanisms.

This manual provides information for operating the ID Sensor system. Be sure to read this manual before attempting to use the ID Sensor systems and keep this manual close at hand for reference during operation.

Since the V620 ID Sensor system uses microwaves of 2,450 MHz, permission is required from the local electrical communications regulatory board before installing the system.

⚠ **WARNING** It is extremely important that ID Sensor systems be used for the specified purpose and under the specified conditions, especially in applications that can directly or indirectly affect human life. You must consult with your OMRON representative before applying ID Sensor systems to the above-mentioned applications.

3 Safety Precautions

⚠ **WARNING** Do not attempt to disassemble, repair, or modify any Units. Any attempt to do so may result in malfunction, fire, or electric shock.

⚠ **WARNING** Do not attempt to take any Unit apart while the power is being supplied. Doing so may result in electric shock.

⚠ **WARNING** Do not touch any of the terminals or terminal blocks while the power is being supplied. Doing so may result in electric shock.

⚠ **WARNING** Do not throw the Data Carrier into fire or heat the Data Carrier to a temperature exceeding 100°C. Doing so may cause ignition or burning of the built-in lithium battery.

⚠ **WARNING** Do not short the battery terminals or charge, disassemble, heat, or incinerate the battery. Doing any of these may result in leakage, rupture, heat generation, or ignition of the battery.

⚠ **WARNING** Provide safety measures in external circuits, i.e., not in the Programmable Controller (CPU Unit including associated Units; referred to as "PC"), in order to ensure safety in the system if an abnormality occurs due to malfunction of the PC or another external factor affecting the PC operation. Not doing so may result in serious accidents.

- Emergency stop circuits, interlock circuits, limit circuits, and similar safety measures must be provided in external control circuits.
- The PC will turn OFF all outputs when its self-diagnosis function detects any error or when a severe failure alarm (FALS) instruction is executed. As a countermeasure for such errors, external safety measures must be provided to ensure safety in the system.
- The PC outputs may remain ON or OFF due to deposition or burning of the output relays or destruction of the output transistors. As a countermeasure for such problems, external safety measures must be provided to ensure safety in the system.

4 Operating Environment Precautions

⚠ **Caution** Do not operate the ID Sensor system in the following locations:

- Locations subject to direct sunlight.
- Locations subject to temperatures or humidity outside the range specified in the specifications.
- Locations subject to condensation as the result of severe changes in temperature.
- Locations subject to corrosive or flammable gases.
- Locations subject to dust (especially iron dust) or salts.
- Locations subject to exposure to water, oil, or chemicals.
- Locations subject to shock or vibration.

⚠ **Caution** Take appropriate and sufficient countermeasures when installing systems in the following locations:

- Locations subject to static electricity or other forms of noise.
- Locations subject to strong electromagnetic fields.
- Locations subject to possible exposure to radioactivity.
- Locations close to power supplies.

⚠ **Caution** The operating environment of the ID Sensor system can have a large effect on the longevity and reliability of the system. Improper operating environments can lead to malfunction, failure, and other unforeseeable problems with the ID Sensor system. Be sure that the operating environment is within the specified conditions at installation and remains within the specified conditions during the life of the system.

5 Application Precautions

Observe the following precautions when using the ID Sensor system.

- Fail-safe measures must be taken by the customer to ensure safety in the event of incorrect, missing, or abnormal signals caused by broken signal lines, momentary power interruptions, or other causes.
- Interlock circuits, limit circuits, and similar safety measures in external circuits (i.e., not in the Programmable Controller) must be provided by the customer.

⚠ WARNING Always heed these precautions. Failure to abide by the following precautions could lead to serious or possibly fatal injury.

- Always connect to a ground of 100 Ω or less when installing the ID Sensor systems. Not connecting to a ground of 100 Ω or less may result in electric shock.
- Always turn OFF the power supply to the PC before attempting any of the following. Not turning OFF the power supply may result in malfunction or electric shock.
    - Mounting or dismounting Power Supply Units, I/O Units, CPU Units, Memory Cassettes, or any other Units.
    - Assembling the Units.
    - Setting DIP switches or rotary switches.
    - Connecting cables or wiring the system.
    - Connecting or disconnecting the connectors.

⚠ Caution Failure to abide by the following precautions could lead to faulty operation of the PC or the system, or could damage the PC or PC Units. Always heed these precautions.

- Always use the power supply voltages specified in the operation manuals. An incorrect voltage may result in malfunction or burning.
- Take appropriate measures to ensure that the specified power with the rated voltage and frequency is supplied. Be particularly careful in places where the power supply is unstable. An incorrect power supply may result in malfunction.
- Install external breakers and take other safety measures against short-circuiting in external wiring. Insufficient safety measures against short-circuiting may result in burning.
- Do not apply voltages to the Input Units in excess of the rated input voltage. Excess voltages may result in burning.
- Do not apply voltages or connect loads to the Output Units in excess of the maximum switching capacity. Excess voltage or loads may result in burning.
- Disconnect the functional ground terminal when performing withstand voltage tests. Not disconnecting the functional ground terminal may result in burning.
- Be sure that all the mounting screws, terminal screws, and cable connector screws are tightened to the torque specified in the relevant manuals. Incorrect tightening torque may result in malfunction.
- Use crimp terminals for wiring. Do not connect bare stranded wires directly to terminals. Connection of bare stranded wires may result in burning.
- Double-check all wiring and switch settings before turning ON the power supply. Incorrect wiring may result in burning.
- Be sure that the terminal blocks, Memory Units, expansion cables, and other items with locking devices are properly locked into place. Improper locking may result in malfunction.
- Check switch settings, the contents of the DM Area, and other preparations before starting operation. Starting operation without the proper settings or data may result in an unexpected operation.
- Check the user program for proper execution before actually running it on the system. Not checking the program may result in an unexpected operation.
- Confirm that no adverse effect will occur in the system before attempting any of the following. Not doing so may result in an unexpected operation.

  - Changing the operating mode of the PC.
  - Force-setting/force-resetting any bit in memory.
  - Changing the present value of any word or any set value in memory.
- Resume operation only after transferring to the new CPU Unit the contents of the DM Area, HR Area, and other data required for resuming operation. Not doing so may result in an unexpected operation.
- Do not pull on the cables or bend the cables beyond their natural limit. Doing either of these may break the cables.
- Do not place objects on top of the cables or other wiring lines. Doing so may break the cables.
- When replacing parts, be sure to confirm that the rating of a new part is correct. Not doing so may result in malfunction or burning.
- Before touching a Unit, be sure to first touch a grounded metallic object in order to discharge any static built-up. Not doing so may result in malfunction or damage.
- Install the Units properly as specified in the operation manuals. Improper installation of the Units may result in malfunction.

SECTION 1
System Description and Installation

This section describes the features, components, configuration, and installation of the ID Sensor systems.

1-1 System Description 2
1-2 Features 3
1-3 Components and Indicators. 5
1-4 System Configuration 6
1-5 System Connections 7
1-6 Maximum Distance Between ID Sensor Unit and R/W Head 9
1-7 Maximum Distance Between ID Sensor Unit and R/W Antenna. 9

Section Overview

This manual covers the operation of two ID Sensor models, the C200H-IDS01-V1 Electromagnetic Induction ID Sensor Unit and the C200H-IDS21 Microwave ID Sensor Unit. The main difference between the Units is the distance at which the ID Sensor can read data from or write data to the Data Carrier. The Microwave ID Sensor Unit allows the Data Carrier to be placed farther from the Unit.

This section describes the components, installation, and configuration of both models.

1-1 System Description

The ID Sensor system is a versatile noncontact identification system comprising an ID Sensor Unit, a single Read/Write (R/W) Head or Antenna, and a Data Carrier.

The ID Sensor mounts to a C200H Programmable Controller (PC); the Data Carrier mounts to a moving workpiece or workpiece carrier. The R/W Head or Antenna, connected to the ID Sensor Unit by a cable, must be positioned within communication range of the travel path of the Data Carrier. Responding to commands from the user program in the CPU of the PC, the ID Sensor reads data from or writes data to the Data Carrier through the R/W Head or Antenna. The operation of the ID Sensor can be monitored and tested with the Handheld Programming Console; messages appear on the display of the Console.

The following diagram illustrates two ID Sensor systems, one using a C200H-IDS01-V1 ID Sensor and one using a C200H-IDS21 ID Sensor.

C200H ID Sensor Systems

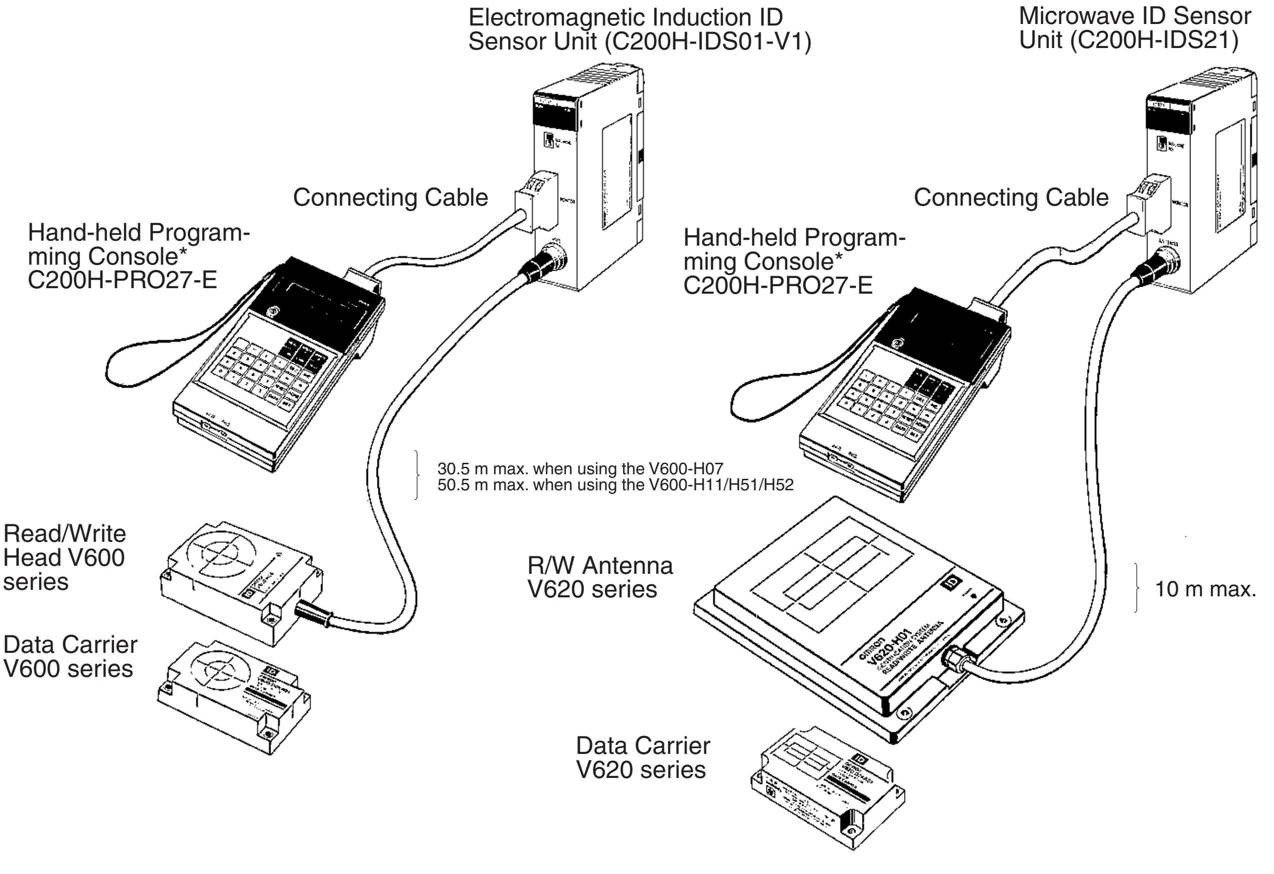
Electromagnetic Induction ID Sensor Unit (C200H-IDS01-V1)
Microwave ID Sensor Unit (C200H-IDS21)
Connecting Cable
Hand-held Programming Console* C200H-PRO27-E
Connecting Cable
Hand-held Programming Console* C200H-PRO27-E
30.5 m max. when using the V600-H07
50.5 m max. when using the V600-H11/H51/H52
Read/Write Head V600 series
Data Carrier V600 series
R/W Antenna V620 series
10 m max.
Data Carrier V620 series

1-2 Features

The ID Sensor systems have the following features:

Seven Dedicated Commands

Data is transferred between the ID Sensor Unit and the Data Carrier with the following six dedicated commands:

Read
Write
Auto Read
Auto Write
Clear-all
Auto Read/Write Abort
Data management (C200H-IDS01-V1 only)

Up to 1024 bytes of data can be read from or written to the Data Carrier at one time. Clear-all clears all data in the Data Carrier’s memory (2K bytes). These commands are compatible with the V600 and V620 ID Controllers.

Monitoring with the Handheld Programming Console

The Handheld Programming Console can be used for monitoring data transfer as well as errors that have occurred during operation. A keyboard sheet for the Handheld Programming Console is included with the ID Sensor Unit.

Storage of Error Information

Error information is stored in the internal memory of the ID Sensor Unit. A built-in capacitor stores the information for 15 days (at 25°C).

Compatibility

The following table lists the compatibility between the I/D Sensor Unit and the R/W Head, R/W Antenna, or Data Carrier.

ID Sensor	Electromagnetic induction			Microwave	
	V600-H□□ R/W Head	**V600-D□□R□□ Data Carrier (with built-in battery)**	**V600-D□□P□□ Data Carrier (with no built-in battery)**	**V620-H□□ R/W Antenna**	**V620-D□□R□□ Data Carrier (with built-in battery)**
C200H-IDS01-V1	Yes	Yes	Yes	No	No
C200H-IDS01	Yes	Yes	No	No	No
C200H-IDS21	No	No	No	V620-H01/-H02	V620-D8KR01

Note Refer to the list of applicable manuals in the *About this Manual* section.

Differences between C200H-IDS01 and C200H-IDS01-V1

The C200H-IDS01-V1, which is an updated version of the C200H-IDS01, has the following three new features in addition to all the capabilities that the C200H-IDS01 possesses. The C200H-IDS01 is compatible with the C200H-IDS01-V1.

1,2,3...

1. Connecting to Data Carrier Incorporating EEPROM

   The C200H-IDS01-V1 reads data from and writes data to the V600-D□□P□□ containing an EEPROM. To read data, the user can select the communications distance priority mode or communications speed priority mode with the local communications mode pin (pin 3 of the DIP switch). Neither of these modes are, however, available when the ID Sensor Unit is connected to the SRAM Data Carrier.

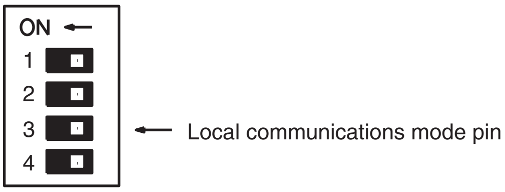

2. New Commands

The C200H-IDS01-V1 incorporates data management commands, with which it is possible to check the reliability of the Data Carrier’s data. The details of the commands are as follows:

Function	Command	Meaning
Checking of data	MD-K	By adding a check code to the Data Carrier’s data, it is possible to detect a data error due to the battery of the Data Carrier that incorporates SRAM, or excessive overwriting operations of the Data Carrier that incorporates EEPROM. Use the MD-K command to calculate and write the check code to the Data Carrier. Use the MD-C command to collate the check code. The MD-K command and MD-C command must be always used together.
	MD-C	
Checking of the number of overwriting operations	MD-L	Check the life of the Data Carrier’s EEPROM by counting the number of overwriting operations. The Data Carrier’s EEPROM allows a total of 100,000 overwriting operations.
	MD-S	Use this command to specify the number of overwriting operations in the life of the EEPROM in advance. Every time a write operation is performed, 1 is subtracted and the Data Carrier will detect when the life has expired. This command is only available with models of lot number □□55 (May 1995) or later.

3. Hexadecimal Page Number Display

The page number is displayed in hexadecimal, in which case the rightmost two digits of the address are displayed as the page number.

In the following example, the user has access to address 0A00 or 1000.

C200H-IDS01-V1

```
HEAD 1 PAGE 0A
STadrs00 data 00
```

C200H-IDS01
C200H-IDS21

```
ANT. PAGE 10
STadrs00 data 00
```

1-3 Components and Indicators

Although similar in appearance, note that the C200H-IDS01-V1 ID Sensor reads or writes data through a Read/Write Head and the C200H-IDS21 reads or writes data through a Read/Write Antenna.

C200H-IDS01-V1 Front Panel

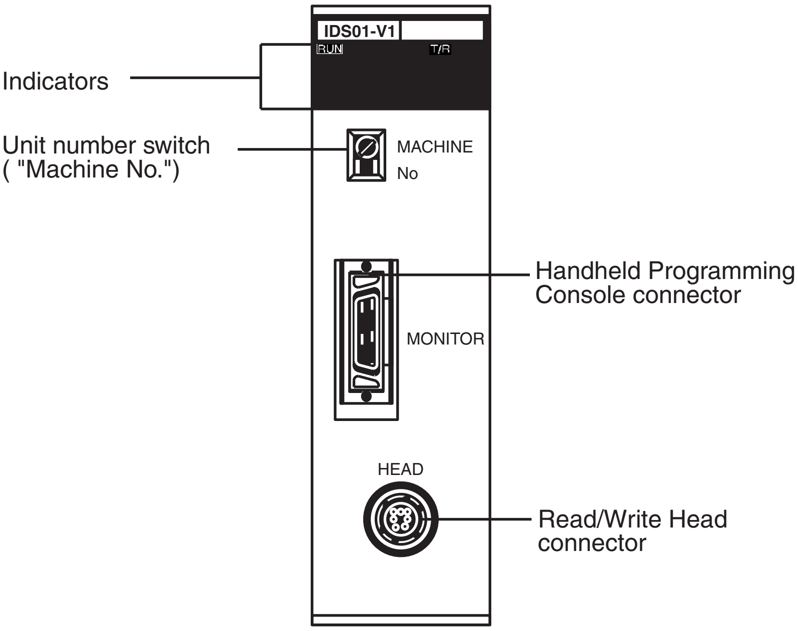
IDS01-V1
RUN
T/R
Indicators
Unit number switch
("Machine No.")
MACHINE
No
Handheld Programming
Console connector
MONITOR
HEAD
Read/Write Head
connector

C200H-IDS21 Front Panel

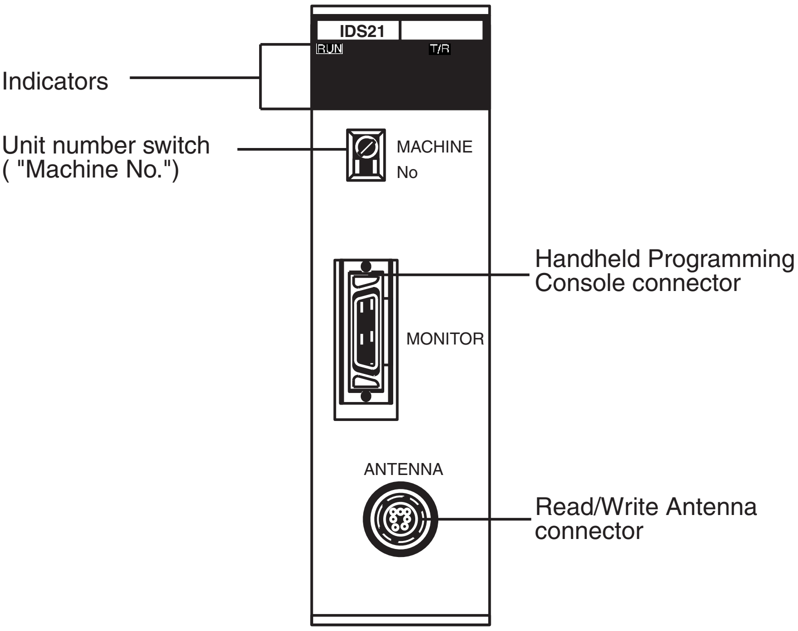
IDS21
RUN
T/R
Indicators
Unit number switch
("Machine No.")
MACHINE
No
Handheld Programming
Console connector
MONITOR
ANTENNA
Read/Write Antenna
connector

Indicators

The table below explains the status of the indicators on both models.

Indicator	Function
RUN	Lit (green) while the ID Sensor is operating.
	Unlit if an error occurs in the ID Sensor Unit.
T/R	Lit (green) during data communication.
	Unlit when data is not transmitted.

Back Panel C200H-IDS01-V1/IDS21

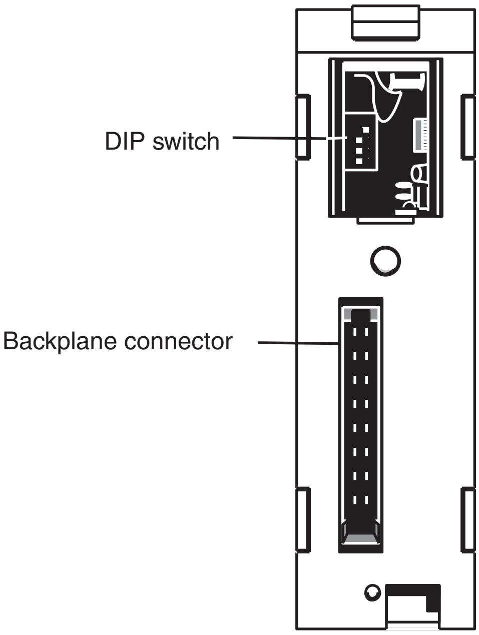

Pin No.	Function		
1	Screen messages	OFF	Japanese
		ON	English
2	Local communications mode (see note)	OFF	Communications distance priority mode
		ON	Communications speed priority mode
3, 4	Always OFF		

Note The user can select the communications distance priority mode or communications speed priority mode with pin 2 of the DIP switch when the C200H-IDS01-V1 accesses the EEPROM Data Carrier. Neither of these modes are, however, available when the ID Sensor Unit accesses the SRAM Data Carrier or when the C200H-IDS21 accesses any Data Carrier, in which case turn pin 2 OFF. Refer to the *V600 FA ID System R/W Heads and EEPROM Data Carriers Operation Manual* for the communications distance and speed of the EEPROM Data Carrier.

1-4 System Configuration

The diagrams below illustrate the system configurations of the C200H-IDS01-V1 Electromagnetic Induction ID Sensor Unit and the C200H-IDS21 Microwave ID Sensor Unit.

The ID Sensor Unit transfers data through the Read/Write Head (or Antenna) to a Data Carrier, which is mounted on a moving workpiece. The ID Sensor Unit transfers the desired data according to instructions from the user program in the CPU (refer to *2-3 The User Program*). Only one Read/Write Head (or Antenna) can be connected to the ID Sensor Unit.

Data and error information can be monitored through a Handheld Programming Console connected to the ID Sensor Unit. The data is displayed on the screen of the Programming Console.

C200H-IDS01-V1 Electromagnetic Induction ID Sensor

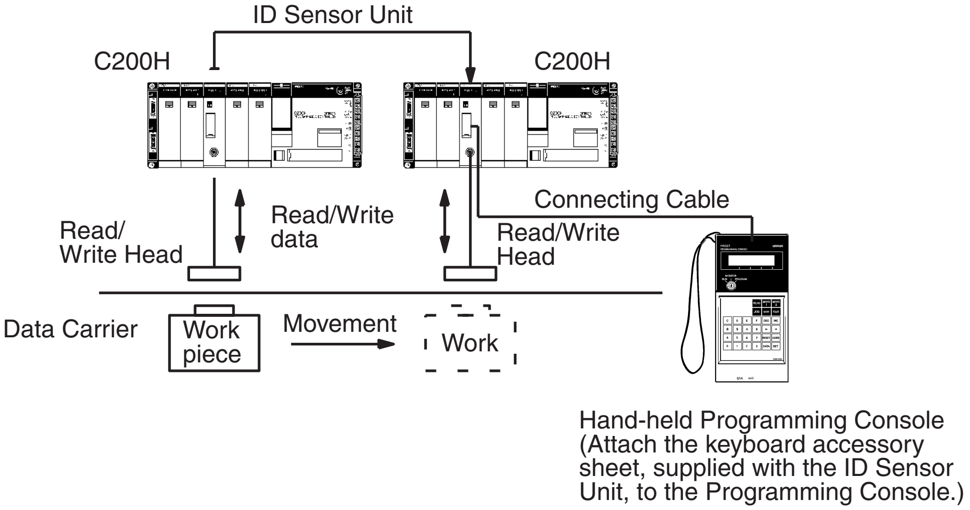
ID Sensor Unit
C200H
C200H
Connecting Cable
Read/Write Head
Read/Write data
Read/Write Head
Data Carrier
Work piece
Movement
Work
Hand-held Programming Console (Attach the keyboard accessory sheet, supplied with the ID Sensor Unit, to the Programming Console.)

C200H-IDS21 Microwave ID Sensor Unit

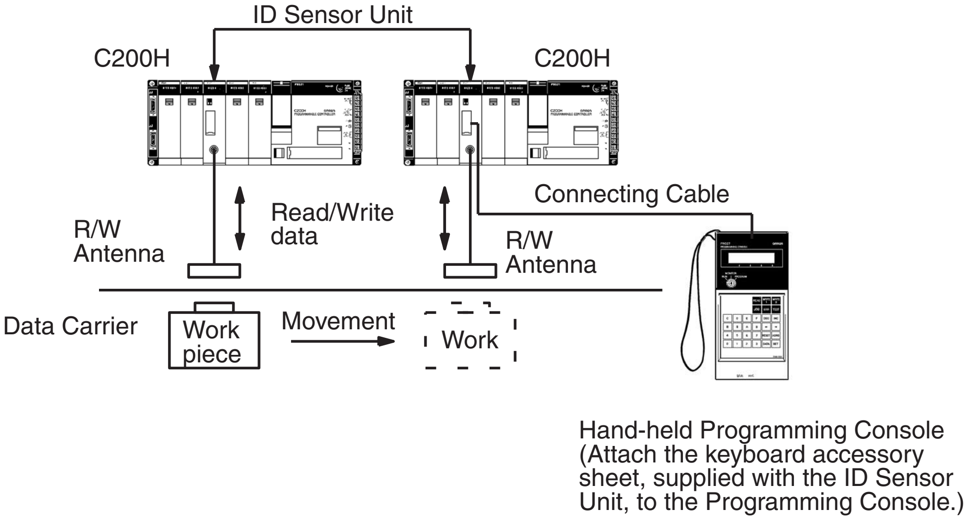
ID Sensor Unit
C200H
C200H
Connecting Cable
R/W Antenna
Read/Write data
R/W Antenna
Data Carrier
Work piece
Movement
Work
Hand-held Programming Console (Attach the keyboard accessory sheet, supplied with the ID Sensor Unit, to the Programming Console.)

1-5 System Connections

Mounting the ID Sensor Unit

As a Special I/O Unit, an ID Sensor Unit can be mounted to any slot on the C200H PC Backplane except the two rightmost slots; these two slots are reserved for peripheral devices.

Up to ten Special I/O Units can be mounted to a PC system. (The PC Link Unit, used to link two PCs, is a Special I/O Unit.) The number of ID Sensor Units which can be connected may be limited by the size of the Backplane, the Power Supply, and the current consumption of each Unit. For details, refer to the *C200H Programmable Controller Installation Guide*.

Mounting to a Remote I/O Slave Rack

The maximum number of Special I/O Units that can be mounted to a Remote Slave Rack differs depending on the group (A, B, C, or D, as shown in the following table) to which they belong.

The information in this table applies only when no other Special I/O Units are mounted to other Racks (PC or Expansion I/O Racks) and the Units in this table are mounted only to a Remote I/O Slave Rack.

A	B	C	D
High-speed Counter, Position Control Unit (NC111/NC112), ASCII Unit, Analog I/O Unit, ID Sensor Unit, Fuzzy Logic Unit	High-density I/O Units, Temperature Control Units, Cam Positioner Unit	Temperature Sensor Unit, Voice Unit	Position Control Unit (NC211)
4 Units max.	---	---	---
---	8 Units max.	---	---
---	---	6 Units max.	---
---	---	---	2 Units max.

When combining Units from groups A, B, C, and D, use the following formulae:

$3A + B + 2C + 6D \leq 12$
$A + B + C + D \leq 8$

A maximum of ten Units can be mounted to one Remote I/O Slave Rack. However, when mounting ten Units, the NC211 Position Control Unit is counted as two Units and, if a PC Link Unit is used, it is counted as one Unit.

Connecting the ID System

Refer to page 2 for an illustration of system connections.

Before connecting and wiring the ID Sensor Unit, turn OFF the power to the PC.

Connect the R/W Head or Antenna to the ID Sensor Unit connector marked “HEAD” or “Antenna”. (To disconnect the cable, pull while grasping the outer ring of the cable; do not pull at an angle.)

Connecting the Handheld Programming Console

Refer to *3-2 Monitoring* for information on connecting the Handheld Programming Console.

The Next Step

Once you have completed installation of the ID Sensor system, turn to *SECTION 2 Operation* for details on setup and operation.

1-6 Maximum Distance Between ID Sensor Unit and R/W Head

R/W Head	C500				C200	
	IDS01-V1	IDS01-V2	IDS02	IDS02-V1	IDS01	IDS01-V1
V600-H52 (V600-D23P52) (V600-D23P54)	---	50.5 m	---	10 m	---	50.5 m
V600-H51 (V600-D23P61)	---	50.5 m	---	10 m	---	50.5 m
V600-H11 (V600-D23P72) (V600-D23P61) (V600-D2KR16)	---	50.5 m	---	10 m	---	50.5 m
V600-H07 (V600-D23P71) (V600-D23P72)	30.5 m for lots manufactured in or after 1991 and 10 m for lots manufactured before 1991.	30.5 m	10 m	10 m	30.5 m for lots manufactured in or after 1992 and 10 m for lots manufactured before 1992.	30.5 m
V600-H06	10 m	30.5 m	10 m	10 m	10 m	30.5 m

Note With the C500-IDS02 (V1), the maximum cable length between the IDS02 (V1) and IDA02 is 200 m max. The length shown above is a distance between the IDA02 and the R/W Head.

1-7 Maximum Distance Between ID Sensor Unit and R/W Antenna

R/W Antenna	C500		C200H-IDS21
	IDS21	IDS22	
V620-H01 (microwave)	10 m	10 m	10 m

Note With the C500-IDS22, the maximum cable length between the IDS22 and IDA22 is 200 m max. This length shown above is a distance between the IDA22 and the R/W Head.

SECTION 2
Operation

This section describes operation of the ID Sensor Units, and covers switch settings, bit allocation, and communication commands, and introduces the user program.

2-1 Switch Settings 12
2-2 Word Settings 13
2-3 The User Program 17
    2-3-1 Communication Commands 19
    2-3-2 Data Carrier Memory 29
    2-3-3 Write Protection Function. 30
    2-3-4 Write Protection Examples 32
    2-3-5 The Data Carrier’s Production Date 36
    2-3-6 Detection of Data Carrier’s Life 37

Section Overview

This section contains information on switch settings, bit allocation, and setup of both ID Sensor systems, as well as explanations of the user program, communication commands, and the write-protect function.

2-1 Switch Settings

Unit Number Switch

Before beginning operation, use the unit number switch on the front panel to set the unit number (0 through 9) of the ID Sensor Unit. Each Special I/O Unit must be assigned its own number; if the same number is assigned to more than one Unit, an I/O Unit Over error will occur, preventing system operation.

To set the unit number:

1,2,3...

1. Determine the appropriate unit number (refer to *1-5 System Connections* for information on Special I/O Units).
2. Turn OFF the power to the PC.
3. Using a small standard screwdriver, turn the dial to the desired number. The dial clicks into position at each number setting; do not leave the dial between settings.

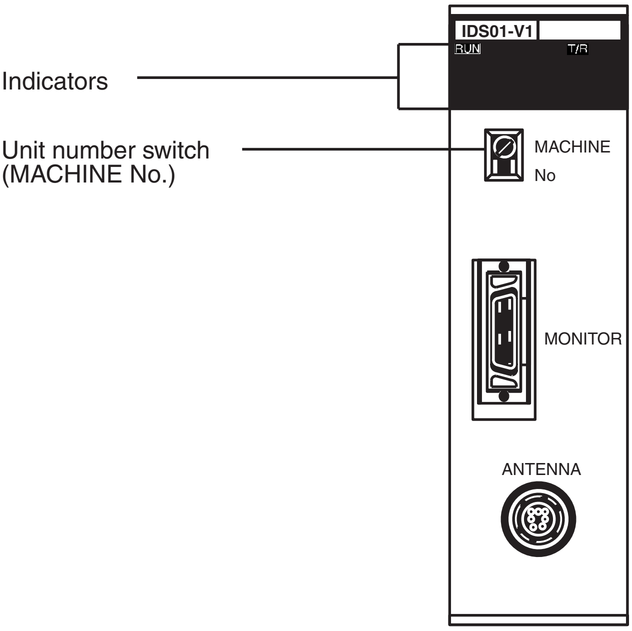

Back Panel DIP Switch

(Refer to the diagram of the back panel on page 5.) Pin 1 is used to select the language of the Programming Console display; leave this pin at the ON (left) position for English message display. Pins 2 through 4 are for reserved for expansion; leave these pins at the OFF (right) position.

2-2 Word Settings

Words 100 through 199 in the IR area of the PC are reserved for Special I/O Units. Each Special I/O Unit is assigned ten words, of which five are needed. These five words, used by the ID Sensor or other Special I/O Units for data communication, are referred to as I/O refresh data (stored in the I/O refresh data area). The five words that are not used can be used as work bits.

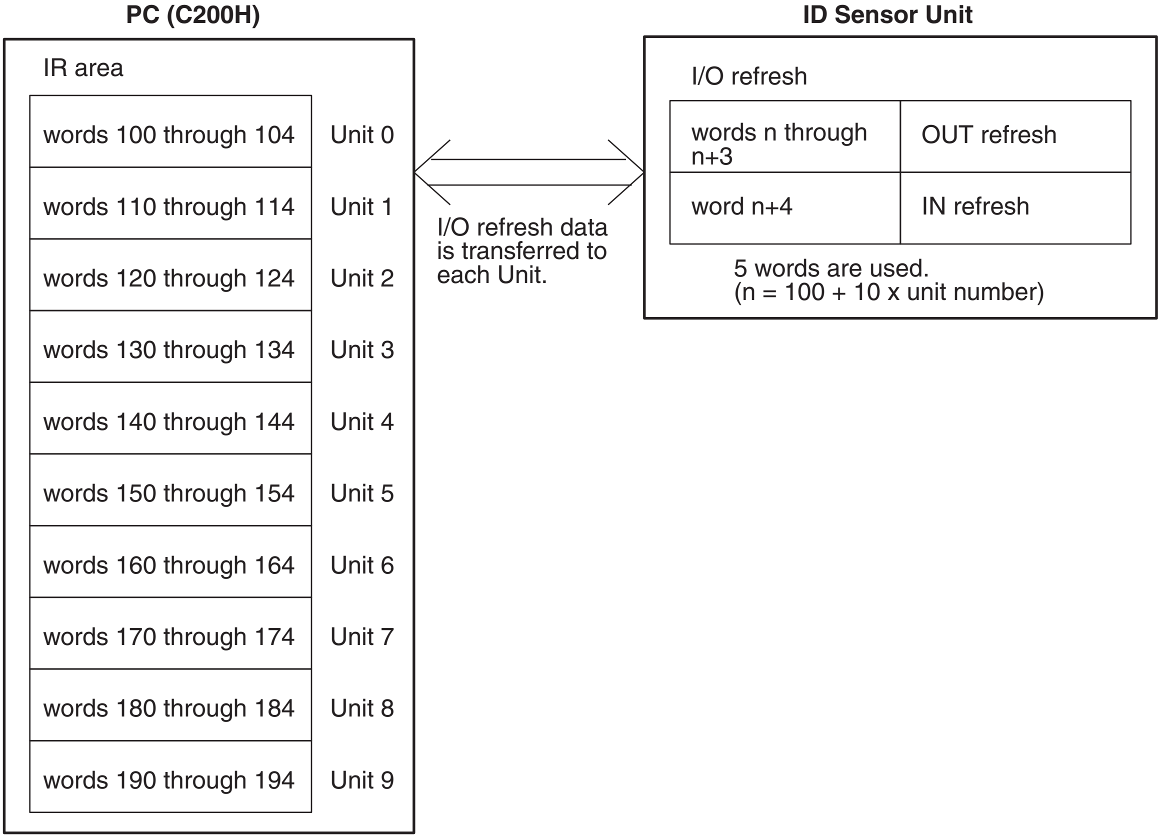

words 100 through 104	Unit 0
words 110 through 114	Unit 1
words 120 through 124	Unit 2
words 130 through 134	Unit 3
words 140 through 144	Unit 4
words 150 through 154	Unit 5
words 160 through 164	Unit 6
words 170 through 174	Unit 7
words 180 through 184	Unit 8
words 190 through 194	Unit 9

I/O refresh data is transferred to each Unit.

words n through n+3	OUT refresh
word n+4	IN refresh

5 words are used.
(n = 100 + 10 x unit number)

Note Each Unit must be assigned a different unit number. If two or more Special I/O Units are assigned the same unit number, the system is unable to determine which Unit is to be accessed and an I/O Unit Over error occurs, halting the system.

IR Bit Allocation

<table>
<tr><th>Word</th><th>Bit number</th><th>Bit name</th><th>Function</th></tr>
<tr><td rowspan="3">n</td><td>00</td><td>Command execution flag</td><td>At the leading edge of the signal, the ID Sensor Unit reads and executes the command.</td></tr>
<tr><td>01</td><td>Error reset flag</td><td>While the ID Sensor Unit is waiting for a command, the error reset flag is turned ON and the error flags in word n+4, bits 08 through 15 are turned OFF.</td></tr>
<tr><td>02 through 15</td><td>–</td><td>Not used (see note 3).</td></tr>
<tr><td rowspan="2">n+1
(see note 2)</td><td>00 through 11</td><td>No. of command data words</td><td>Indicates, in Binary Coded Decimal (BCD), the number of words in the command to be executed. The maximum number of words is 516 (see note 1).</td></tr>
<tr><td>12 through 15</td><td>–</td><td>Not used (see note 3).</td></tr>
<tr><td rowspan="2">n+2
(see note 2)</td><td>00 through 11</td><td>Command data storage area beginning word number</td><td>Indicates, in BCD, the beginning word of the command to be executed (stored in the CPU).
When the DM area exceeds DM 1000, turn ON bit 12.</td></tr>
<tr><td>12 through 15</td><td>Command data storage area</td><td>Indicates the area where the command to be executed is stored.
<table>
<tr><th colspan="4">Bit number</th><th rowspan="2">Area name</th></tr>
<tr><th>15</th><th>14</th><th>13</th><th>12</th></tr>
<tr><td>0</td><td>0</td><td>0</td><td>***</td><td>DM area</td></tr>
<tr><td>0</td><td>0</td><td>1</td><td>0</td><td>IR area</td></tr>
<tr><td>0</td><td>1</td><td>0</td><td>0</td><td>HR area</td></tr>
<tr><td>0</td><td>1</td><td>1</td><td>0</td><td>AR area</td></tr>
<tr><td>1</td><td>0</td><td>0</td><td>0</td><td>LR area</td></tr>
<tr><td>1</td><td>0</td><td>1</td><td>0</td><td>TIM/CNT</td></tr>
</table>
***When the DM area exceeds DM 1000, turn ON bit 12.</td></tr>
<tr><td rowspan="2">n+3
(see note 2)</td><td>00 through 11</td><td>Read data receiving area beginning word number</td><td>The CPU reads the data from the Data Carrier using Read or Auto Read. Specifies the beginning word of the area (in the CPU) where the data is stored. The data is ignored when Write, Auto Write, Clear-all, or Auto Read/Write Abort is executed.</td></tr>
<tr><td>12 through 15</td><td>Read data receiving area</td><td>Specifies the area in the CPU in which the data read from the Data Carrier (using Read or Auto Read) is stored. Refer to word n+2, bits 12 through 15, to determine data areas. The data is ignored when Write, Auto Write, Clear-all or Auto Read or Auto Read/Write Abort is executed.</td></tr>
</table>

Note

1. Only 512 words of data can be read or written, 4 words are used for command data.
2. At the leading edge of a command signal, the data of word n+1 through word n+3 is valid.
3. The unused bits are provided for expansion. Do not use as work bits.

Word	Bit number	Bit name	Function
n+4	00	ID busy	This flag turns ON while the ID Sensor Unit is executing a command.
	01	Waiting for Data Carrier	During the execution of Auto Read or Auto Write, this flag is ON while it is waiting for the Data Carrier to approach the Read/Write Head (or Antenna).
	02	Auto Read/Write Abort end	This flag turns ON when the ID Sensor Unit has received (from the CPU) and completed Auto Read/Write Abort.
	03	Programming Console MONITOR mode	This flag turns ON when the Programming Console (connected to the ID Sensor Unit) is in MONITOR mode.
	04 through 06	–	Not used
	07	Data Carrier warning	This flag turns ON when the Data Carrier’s battery is almost dead. This flag also turns ON when the MD-C command detects a data check error or when the MD-L/MD-S command detects that the number of overwriting operations reaches the specified number.
	08	Read format error	During the execution of Read or Auto Read, this flag is ON when the data in the Data Carrier exceeds the capacity of the receiving area. (Refer to *Read/Write Bit Areas page 16.*)
	09	Command error	This flag is ON when the ID Sensor Unit cannot process the command sent from the CPU. The command may be undefined or may not have a terminator.
	10	No Data Carrier error	This flag turns ON when the Data Carrier is undetected by the ID Sensor after the ID Sensor has received Read, Write, or Clear-all from the CPU.
	11	Write protect error	This flag turns ON when an attempt is made to write data to a write-protected area of the ID Sensor Unit’s memory.
	12	Data Carrier communication error	This flag turns ON if an error has occurred during data communication between the ID Sensor Unit and Data Carrier.
	13	Data Carrier address over	This flag turns ON when the ID Sensor Unit attempts to access an address of the Data Carrier which is beyond the Data Carrier’s memory capacity.
	14	Data verification error	As the ID Sensor Unit reads data from or writes data to the Data Carrier, the ID Sensor Unit compares the current data with previously read or written data. If the data is not identical, an error occurs and this flag turns ON.
	15	Read/Write Head (or Antenna) disconnect error	This flag turns ON when the Read/Write Head is improperly connected to the ID Sensor Unit.

Read/Write Bit Areas

The following table shows the memory areas (bits) that the ID Sensor Unit uses when reading data from or writing data to the Data Carrier.

Area	Bits
DM area	DM 0000 through 1999
IR area	000 through 246
HR area	HR 00 through 99
AR area	AR 07 through 22
LR area	LR 00 through 63
TC area	TC 000 through 511

If, during execution of Read or Auto Read, the data read from the Data Carrier exceeds the capacity of the receiving area, a Read Format error occurs and word n+4, bit 08 turns ON.

Example:

Data Carrier Read data: 40 bytes = 20 words
Beginning word number (receiving data): DM 1990

As the above table shows, the words specified in the DM area are DM 0000 through DM 1999. If the beginning word number is DM 1990, only 10 words (DM 1990 through 1999) are available for receiving data. In this example, the quantity of data to be read is too large for the available space in the DM area. A Read Format error will occur and the data will not be written to the DM area.

To correct the error, change the beginning word number (receiving data) to a word number less than DM 1980, or reduce the quantity of data in the Data Carrier to fewer than 10 words.

Error Storage Area

The error information storage area of the ID Sensor Unit is undefined at shipment. Before using the ID Sensor Unit, clear the newest error information and statistical error information. (Refer to *3-2-9 Error Log Display (ERR)* for details).

Error Messages and Reset Flags

The ID Sensor Unit's error messages and reset flags are located in the AR area as "Special I/O Unit Error Message" and "Special I/O Unit Reset Flag". Refer to the *C200H Programmable Controller Operation Manual* for details.

Special I/O Unit Error Message	AR 0000 through AR 0009
Special I/O Unit Reset Flag	AR 0100 through AR 0109

When the error message flag for a particular unit number is ON, the RUN LED of the corresponding Special I/O Unit turns OFF.

2-3 The User Program

The ID Sensor Unit will not function unless the PC is programmed to control the operation of the Unit. The Unit communicates with the Data Carrier through the Read/Write Head by means of the commands provided by the user program of the PC.

Program examples with detailed explanations are provided in *Section 3-1 Program Examples*.

The following figure shows the basic operation outline of the program.

Operation Outline

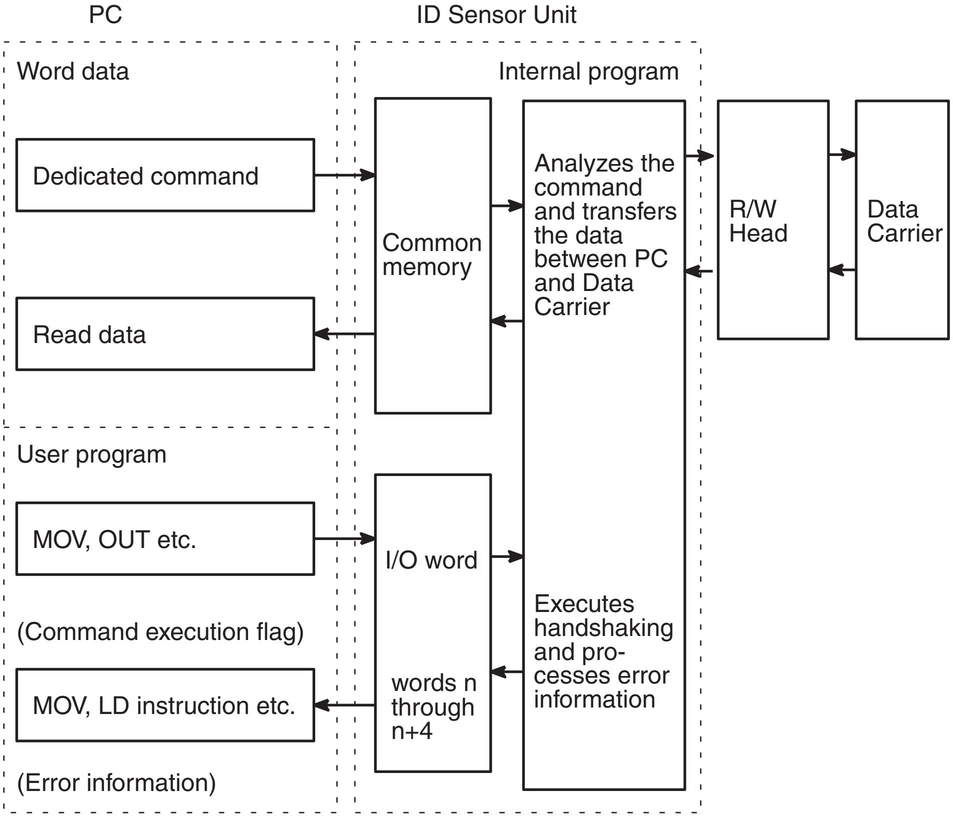
PC
ID Sensor Unit
Word data
Internal program
Dedicated command
Read data
Common memory
Analyzes the command and transfers the data between PC and Data Carrier
R/W Head
Data Carrier
User program
MOV, OUT etc.
(Command execution flag)
MOV, LD instruction etc.
(Error information)
I/O word
words n through n+4
Executes handshaking and processes error information

Effect of CPU Status on ID Sensor Unit

The ID Sensor Unit is controlled by the program contained in the CPU; if an error occurs in the CPU, an error will also occur in the ID Sensor Unit.

The ID Sensor Unit will continue to execute commands when the PC is in PROGRAM mode.

Communication with the CPU

The ID Sensor Unit reads data from and writes data to the Data Carrier in accordance with the commands sent from the CPU.

Writing Data to the Data Carrier from the CPU

The CPU, via the Write, Auto Write, and Clear-all commands, directs the ID Sensor Unit to write data to the Data Carrier. The following diagram shows how the program writes data to the Data Carrier.

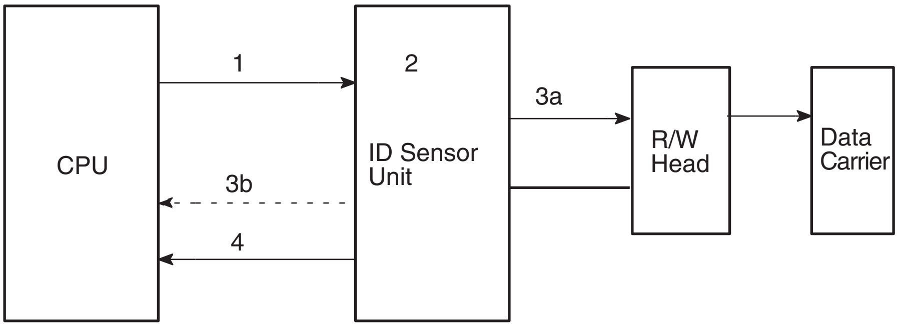

1. The CPU sends the command data (the number of words in the command to be sent, the beginning word number of the command, and the command execution start) to the ID Sensor Unit by using MOV or OUT.
2. The ID Sensor Unit analyzes the command received from the CPU.

3a. If the command is legal, the ID Sensor Unit writes the required data to the Data Carrier.

3b. If the command is illegal, the ID Sensor Unit sets the Command Error flag (word n+4 bit 09) to ON and returns the data to the CPU. At this time, the ID Busy flag (word n+4 bit 00) is turned OFF.

4. When the ID Sensor Unit has completed communication with the Data Carrier, the Unit turns OFF the ID Busy flag as the command is completed, and returns the data to the CPU.

If communication with the Data Carrier fails, or if an error occurs during communication, the ID Sensor Unit stops data communication with the Data Carrier, turns ON the Data Carrier communication error flags, returns the data to the PC, and turns OFF the ID Busy flag.

Steps 1 to 4 compose one write operation.

Reading Data from the Data Carrier to the CPU

The CPU, via the Read and Auto Read commands, directs the ID Sensor Unit to read data from the Data Carrier to the CPU. The following diagram shows how the program reads data from the Data Carrier.

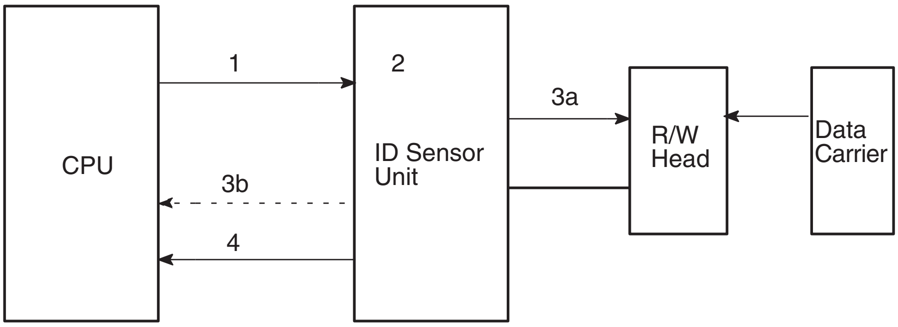

1. The CPU sends command data (the number of words in the command, the beginning word number of the command, and the beginning word number of the data to be received) to the ID Sensor Unit by using MOV or OUT.
2. The ID Sensor Unit analyzes the command received from the CPU.

3a. If the command is legal, the ID Sensor Unit reads the required data to the Data Carrier.

3b. If the command is illegal, or the Read format is illegal, the ID Sensor Unit turns ON both the Command Error flag (word n+4 bit 09) and the Read Format Error flag (word n+4 bit 08), and returns the data to the PC. At this time, the ID Busy flag (word n+4 bit 00) is turned OFF.

4. When the ID Sensor Unit has completed communication with the Data Carrier (step 4), the ID Sensor Unit forwards the read data to the CPU; the Unit turns OFF the ID Busy flag as the command is completed.

If communication with the Data Carrier fails, or if an error occurs during communication, the ID Sensor Unit stops data communication with the Data Carrier, turns ON the Data Carrier communication error flags, returns the data to the CPU, and turns OFF the ID Busy flag.

Steps 1 to 4 compose one read operation.

2-3-1 Communication Commands

The ID Sensor Unit is provided with seven dedicated commands for communicating with the Data Carrier through the Read/Write Head. The following table outlines these commands.

Command name	Mnemonic	ASCII code	Function
Write	WT	57 54	Writes data to the internal memory of the Data Carrier; up to1024 bytes (512 words) of data can be written at a time.
Read	RD	52 44	Reads data from the internal memory of the Data Carrier; up to 1024 bytes (512 words) of data can be read at a time.
Auto Write	AW	41 57	Waits until the Data Carrier approaches the Read/Write Head and then writes data to the internal memory of the Data Carrier as it comes within detection range of the Read/Write Head. Up to 1024 bytes (512 words) of data can be written at a time.
Auto Read	AR	41 52	Waits until the Data Carrier approaches the Read/Write Head and then reads data from the internal memory of the Data Carrier as it comes within detection range of the Read/Write Head. Up to 1024 bytes (512 words) of data can be read at a time.
Clear-all (see note)	CA	43 41	Clears the contents of the Data Carrier’s internal memory.
Auto Read/Write Abort	AA	41 41	Aborts Auto Read and Auto Write. When this command is executed, the ID Sensor Unit is initialized and waits for the next command.
Data management (C200H-IDS01-V1 only)	MD	4D 44	Checks the Data Carrier’s internal memory. The reliability of data is checked using the MD-K and MD-C commands and the number of overwriting operations is checked using the MD-L and MD-S commands.

Note The Clearall command clears the Data Carrier’s internal memory, regardless of write protection.

When transferring data between the Data Carrier and the ID Sensor Unit, up to 1024 bytes (512 words) of data per scan can be written to or read from the Data Carrier. However, when transferring data between the PC and the ID Sensor Unit, only 20 words can be transferred per scan. Data is transferred between the PC and the ID Sensor Unit at a rate of 0.2 ms per word.

If data is to be read and written simultaneously, the read data can be up to 20 words (40 bytes) in length and the write data can be up to 16 words (32 bytes) in length. (Because the write data is transferred with the command data, which requires 4 of the 20 words, only 16 words are available to carry the write data.) If the data exceeds 20 words, more than one scan is required to transfer the data between the CPU and the ID Sensor Unit, making simultaneous processing impossible.

For details refer to *3-3 Timing Considerations*.

Write Command

This command writes data to the internal memory of the Data Carrier. Up to 1024 bytes (512 words) of data can be written per scan. Specify the first address in hexadecimal.

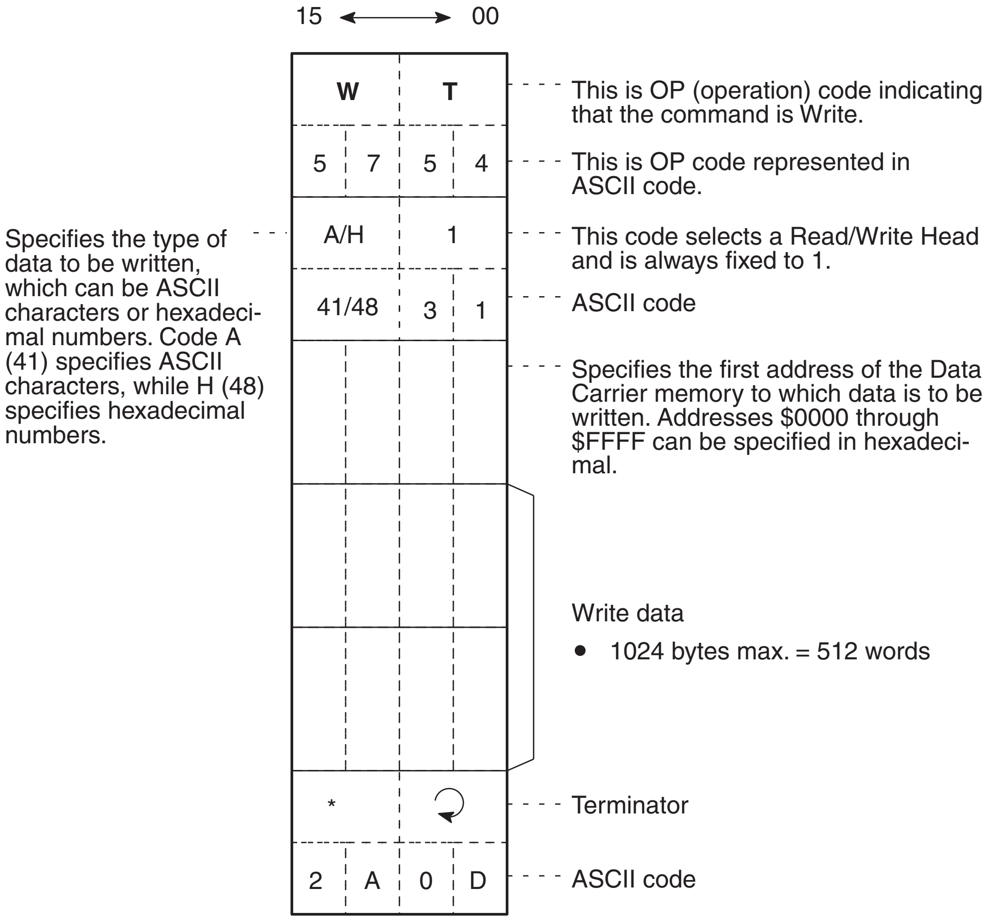

Specifies the type of data to be written, which can be ASCII characters or hexadecimal numbers. Code A (41) specifies ASCII characters, while H (48) specifies hexadecimal numbers.

This is OP (operation) code indicating that the command is Write.

This is OP code represented in ASCII code.

This code selects a Read/Write Head and is always fixed to 1.

ASCII code

Specifies the first address of the Data Carrier memory to which data is to be written. Addresses $0000 through $FFFF can be specified in hexadecimal.

Write data

- 1024 bytes max. = 512 words

Terminator

ASCII code

Read Command

The Read command reads data from the internal memory of the Data Carrier. Up to 1024 bytes (512 words) of data can be read at a time. Specify the first address and the number of bytes in hexadecimal.

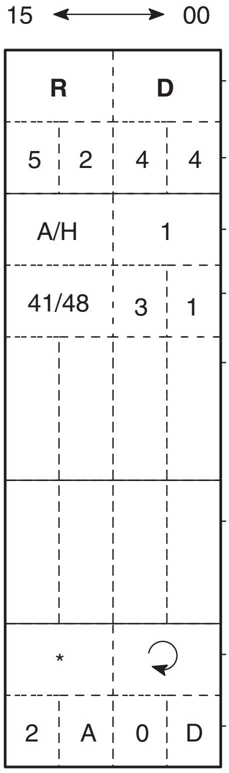

This field specifies whether the data to be read from the Data Carrier is ASCII characters or hexadecimal code. When ASCII characters are to be read, this field contains code A (41 in ASCII code); when hexadecimal code is to be read, it contains code H (48 in ASCII code).

This is OP (operation) code indicating that the command is Read.

This is OP code represented in ASCII code.

This code selects a Read/Write Head and is always fixed to 1.

ASCII code

Specifies the first address of the Data Carrier memory to which data is to be read. Addresses $0000 through $FFFF can be specified in hexadecimal.

Specifies the number of bytes, which can range from $0001 through $0400 (1 through 1024 in decimal), to be read in hexadecimal code.

Terminator

ASCII code

Auto Write Command

The Auto Write command executes when the Data Carrier approaches the Read/Write Head. When the Data Carrier comes within detection range of the Read/Write Head, Auto Write writes data to the internal memory of the Data Carrier. Up to 1024 bytes (512 words) of data can be written at a time. Specify the first address in hexadecimal.

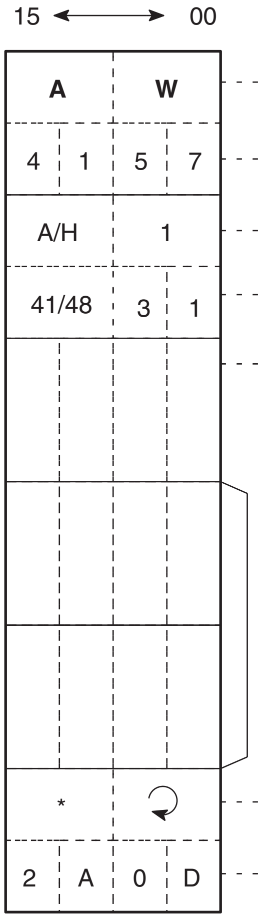

Specifies the type of data to be written, which can be ASCII characters or hexadecimal numbers. Code A (41) specifies ASCII characters, while H (48) specifies hexadecimal numbers.

This is OP (operation) code indicating that the command is Auto Write.

This is OP code represented in ASCII code.

This code selects a Read/Write Head and is always fixed to 1.

ASCII code

Specifies the first address of the Data Carrier memory to which data is to be written. Addresses $0000 through $FFFF can be specified in hexadecimal.

Write data

- 1024 bytes max. = 512 words

Terminator

ASCII code

Auto Read Command

Auto Read executes when the Data Carrier approaches the R/W Head. When the Data Carrier comes within detection range of the R/W Head, Auto Read reads data from the internal memory of the Data Carrier. Up to 1024 bytes (512 words) of data can be read at a time. Specify the first address and the number of bytes in hexadecimal.

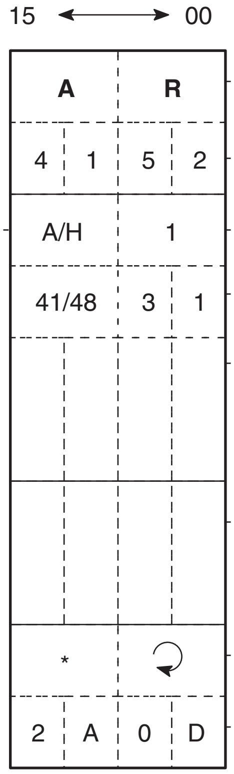

This field specifies whether the data to be read from the Data Carrier is ASCII characters or hexadecimal code. When ASCII characters are to be read, this field contains code A (41 in ASCII code); when hexadecimal code is to be read, it contains code H (48 in ASCII code).

This is OP (operation) code indicating that the command is Auto Read.

This is OP code represented in ASCII code.

This code selects a R/W Head and is always fixed to 1.

ASCII code

Specifies the first address of the Data Carrier memory to which data is to be read. Addresses $0000 through $FFFF can be specified in hexadecimal.

Specifies the number of bytes, which can range from $0001 through $0400, to be read in hexadecimal code.

Terminator

ASCII code

Clear-all Command

Clear-all clears the Data Carrier's internal memory, regardless of write protection. The number of command data words are fixed to three. (Refer to *2-3-5 The Data Carrier's Production Date*.)

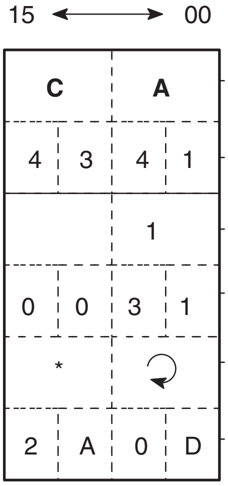

Blank (no specification)

This is OP (operation) code indicating that the command is Clear-all.

This is OP code represented in ASCII code.

This code selects a R/W Head and is always fixed to 1.

ASCII code

Terminator

ASCII code

Auto Read/Write Abort

This command aborts Auto Read and Auto Write. When this command is executed, the ID Sensor Unit is initialized and waits for the next command.

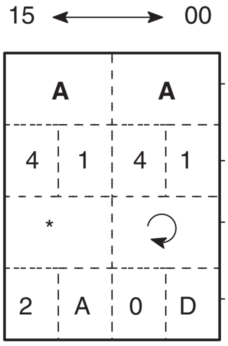

This is OP (operation) code indicating that the command is Auto Read/Write Abort.

This is OP code represented in ASCII code.

Terminator

ASCII code

If, after initialization, the ID Sensor Unit receives Auto Read/ Write Abort from the CPU, the Unit recognizes it as an undefined command and waits for further command input from the CPU. While the Unit is waiting for a command, Waiting for Data Carrier (word n+4 bit 01) is ON.

Data Management (IDS01-V1 Only)

Data Check

By adding a check code to the Data Carrier data, it is possible to detect a data error due to the battery of the SRAM Data Carrier or excessive overwriting operations of the EEPROM Data Carrier. Use the MD-K command to calculate and write the check code to the Data Carrier. Use the MD-C command to collate the check code.

Usage

After data is written to the Data Carrier, use the MD-K command to calculate and add the check code to the data. To check whether or not the Data Carrier’s data is corrupted, use the MD-C command before reading the data and collate the check code.

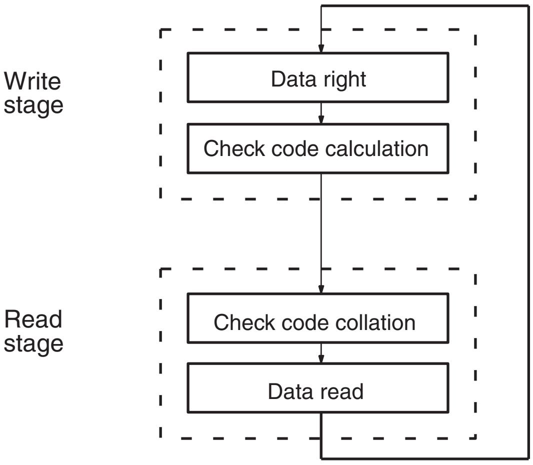

Command

It is possible to calculate, write, or collate the CRC code (see note) in the check area designated by the command. The CRC code is calculated by using the generating function $X^{16} + X^{12} + X^5 + 1$.

Note CRC stands for cyclic redundancy check. The cyclic redundancy check is an error detection method.

The number of check area bytes is 256 (0100) maximum and the number of command data words is fixed at 5.

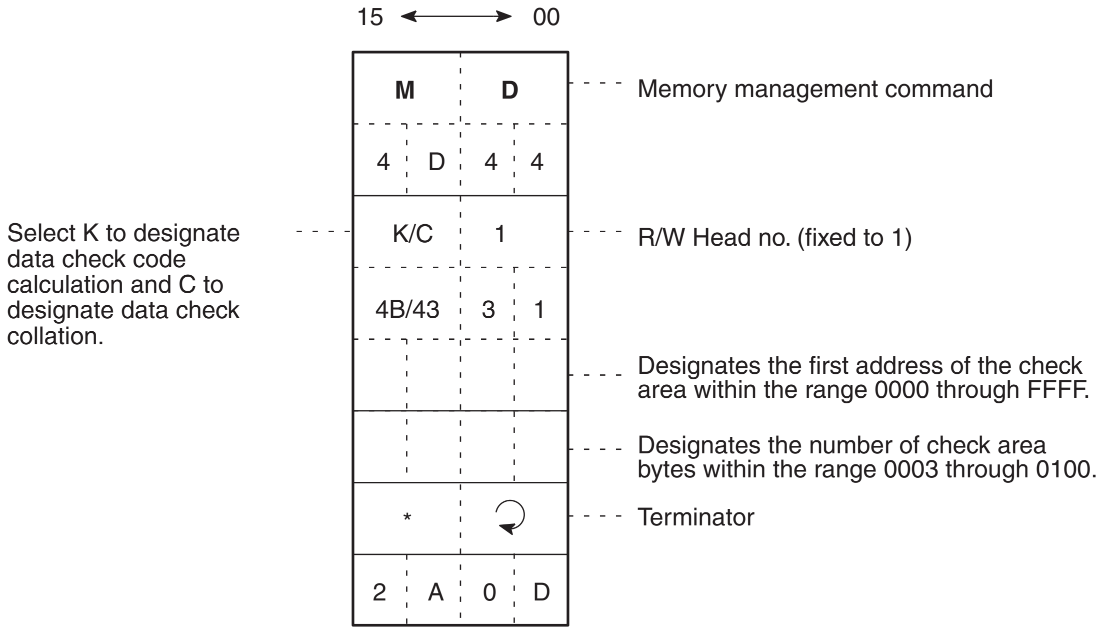

Select K to designate data check code calculation and C to designate data check collation.

Memory management command

R/W Head no. (fixed to 1)

Designates the first address of the check area within the range 0000 through FFFF.

Designates the number of check area bytes within the range 0003 through 0100.

Terminator

If the check codes do not coincide, the DC warning bit (word n+4 bit 07) will be turned ON.

Command Processing

All the check areas that are designated by the first address and number of bytes except the last two bytes is collectively the calculation objective area. The last two bytes are used as the check code area.

If check code calculation or check code writing is designated using processing code K, the CRC of the data in the calculation objective area is calculated and the result is written to the check code area, in which case if the check block is a write protection area, a write protection error will result.

If data collation is designated using processing code C, the CRC of the data in the calculation objective area is calculated and the result is compared with the data in the check code area. If they do not coincide, the DC warning bit will be turned ON.

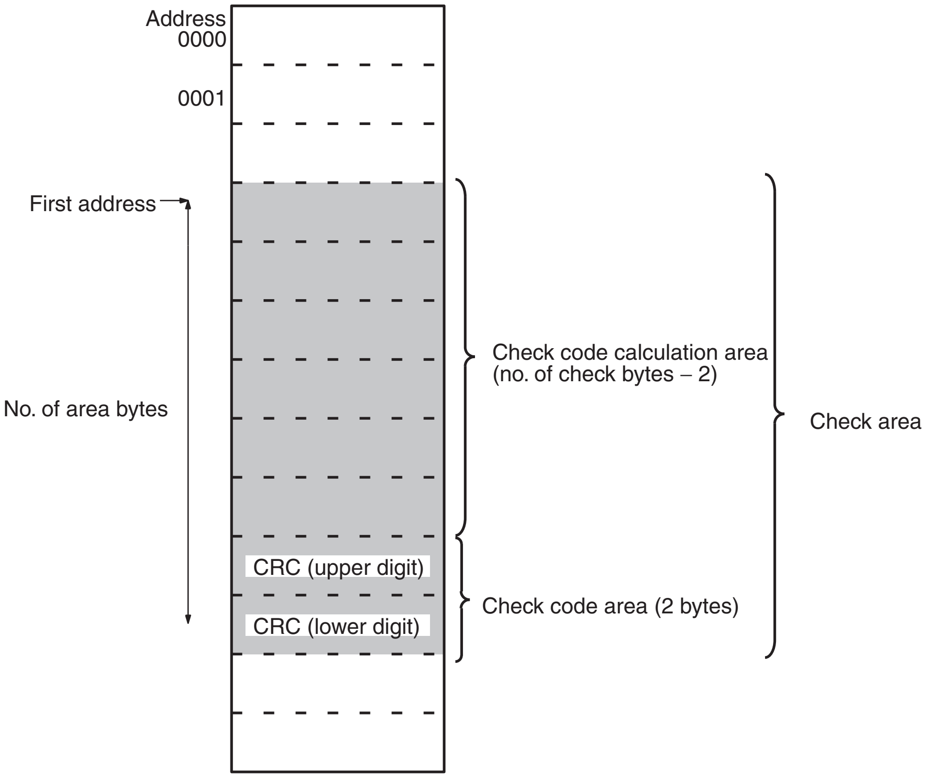
Address
0000
0001
First address
No. of area bytes
CRC (upper digit)
CRC (lower digit)
Check code calculation area
(no. of check bytes – 2)
Check code area (2 bytes)
Check area

Note The last two bytes of a check area are for the check code area, to which nothing must be written.

Management of Overwriting Operations 1

By counting the number of writing operations, it is possible to detect if the EEPROM DC has been overwritten for 100,000 times.

Usage

After writing data to the most frequently used address, renew the number of overwriting operations in order to check the life of the EEPROM. It is possible to overwrite data to each address for 100,000 times. Therefore, it is necessary to count the number of overwriting operations of the most frequently used address. It is also possible to check the life of the EEPROM without renewing the number of overwriting operations.

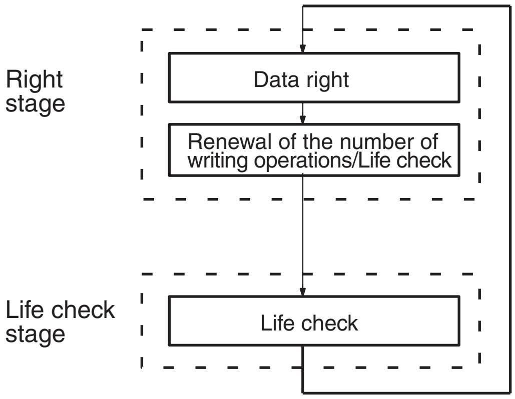
Right
stage
Data right
Renewal of the number of writing operations/Life check
Life check
stage
Life check

Command

Add an appropriate number (up to 255 (00FF)) to the data of the address designated by the user in order to judge if the address has been overwritten 100,000 times. If 0 (0000) is added, only the life of the address will be checked. The number of command data words is fixed at 5.

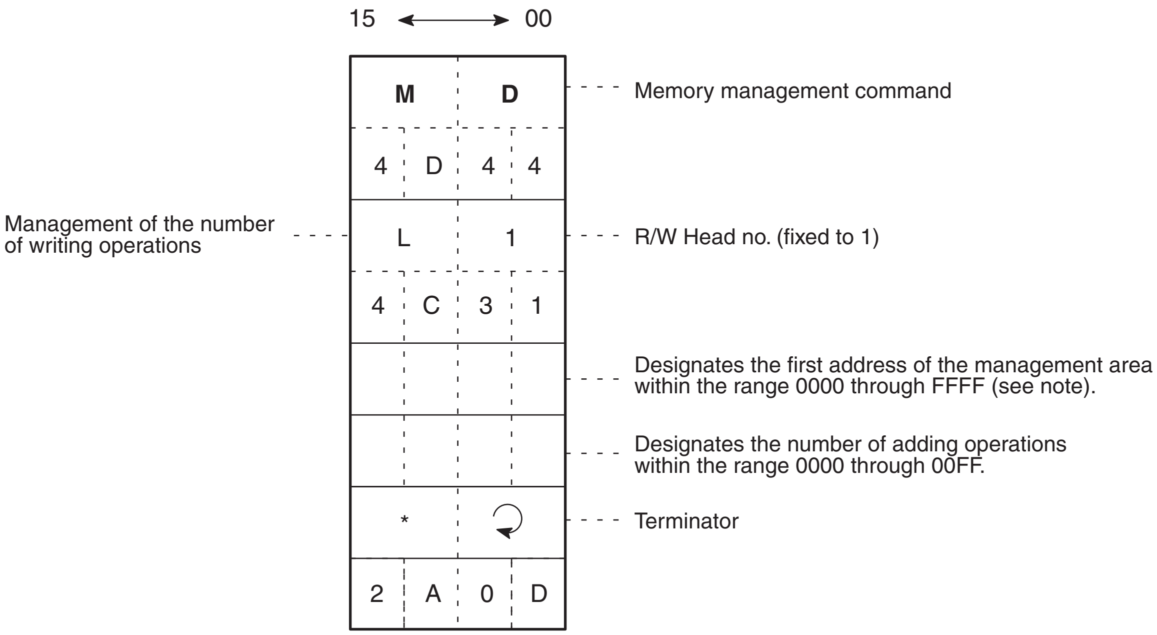
15
00
M
D
4
D
4
4
L
1
4
C
3
1
*
2
A
0
D
Memory management command
Management of the number of writing operations
R/W Head no. (fixed to 1)
Designates the first address of the management area within the range 0000 through FFFF (see note).
Designates the number of adding operations within the range 0000 through 00FF.
Terminator

Note Designate the first address on the EEPROM DC so that the terminator will be □□□0 to □□□5 or □□□8 to □□□D, otherwise an address error will result.

When the command is executed and the address is found to have been overwritten 100,000 times, the DC warning bit will be turned ON.

Command Processing

Overwriting operation management area consists of three bytes from the first address, to which the appropriate number (up to 255 (00FF)) that the user designates is added. If the result is larger than 100,000, the DC warning bit will be turned ON. If the area has been overwritten 100,000 times, the value in the overwriting operation management area will not be renewed.

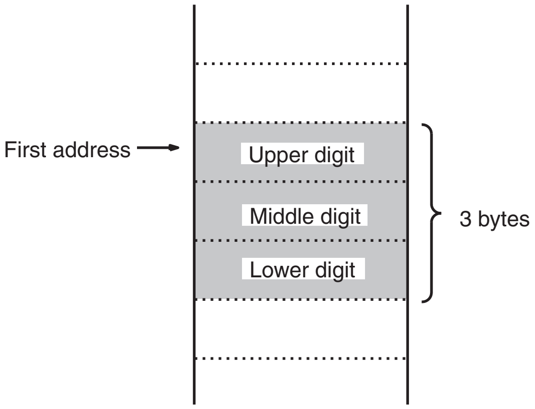
First address
Upper digit
Middle digit
Lower digit
3 bytes

Management of Overwriting Operations 2

By counting the number of writing operations, it is possible to detect if the DC with EEPROM has been overwritten for the number of operations set by the user.

Usage:

Using the write command, write in advance the number of desired overwriting operations onto the overwriting operation management area of the DC.
After writing data to the most frequently used address, renew the number of overwriting operations in order to check the life of the EEPROM. The number of overwriting operations is determined for each address by the DC specifications. Therefore, it is necessary to count the number of overwriting operations of the most frequently used address. It is also possible to check the life of the EEPROM without renewing the number of overwriting operations.

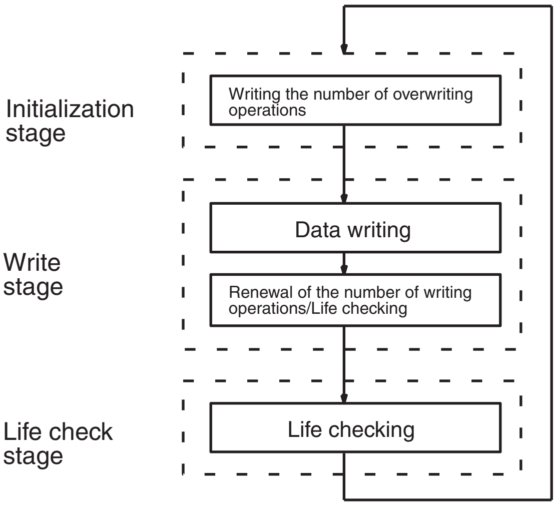
Initialization stage
Writing the number of overwriting operations
Write stage
Data writing
Renewal of the number of writing operations/Life checking
Life check stage
Life checking

Command:

Subtracts an appropriate number [up to 255 (00FF)] from the data of the address designated by the user in order to judge if the address has been overwritten for the number of operations set by the user. If 0 ($0000) is subtracted, only the life of the address will be checked. The number of command data words is fixed to 5.

	15 ←→ 00				
	M		**D**		Memory management command
	4	D	4	4	
Management of the number of writing operations	S		1		R/W Head no. (fixed to 1)
	5	3	3	1	
					Designates the first address of the management area within the range 0000 through FFFF (see note).
					Designates the number of subtracting operations within the range 0000 through 00FF.
	*		↵		Terminator
	2	A	0	D	

Note Designate the first address on the EEPROM DC so that the terminator will be □□□0 to □□□5 or □□□8 to □□□D, otherwise an address error will result.

When the command is executed and the address is found to have been overwritten for the number of operations set by the user, the Data Carrier warning flag will be turned ON.

Command Processing: Overwriting operation management area consists of three bytes from the first address, from which the appropriate number is subtracted. If the value set in this area is smaller than 0, the Data Carrier warning flag will be turned ON. If the data in the management area is already 0, the value in the overwriting operation management area will not be renewed.

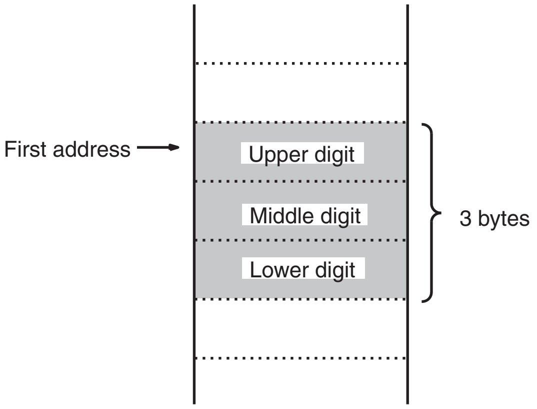
First address
Upper digit
Middle digit
Lower digit
3 bytes

When using a DC with the number of overwriting operations set to 300,000, make the settings as shown below.

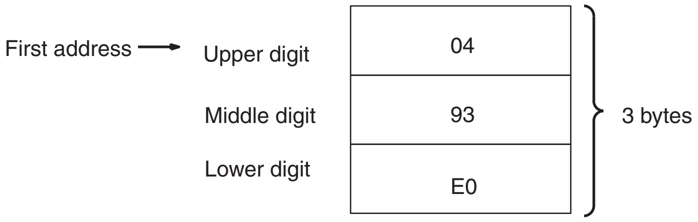
First address
Upper digit
Middle digit
Lower digit
04
93
E0
3 bytes

2-3-2 Data Carrier Memory

The ID Sensor Unit has a memory access space of 64k bytes (0000 to FFFF), the accessible space of which is decided according to the memory capacity of the Data Carrier. The production year and month area, the write protection area of the ID Sensor Unit, and the processing methods of the areas vary with the memory capacity of the Data Carrier, the details of which are explained below.

Data Carrier Memory Map

Data Carrier With a Memory Capacity of 256 Bytes Maximum

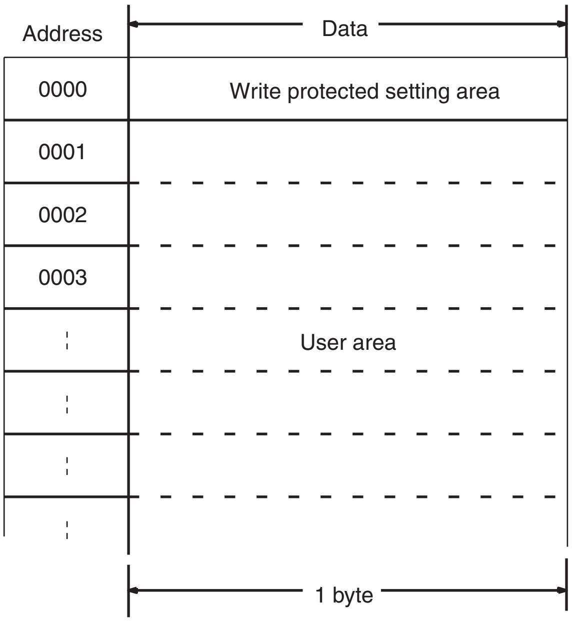
Address
Data
0000
Write protected setting area
0001
0002
0003
User area
1 byte

Data Carrier With a Memory Capacity of More Than 256 Bytes

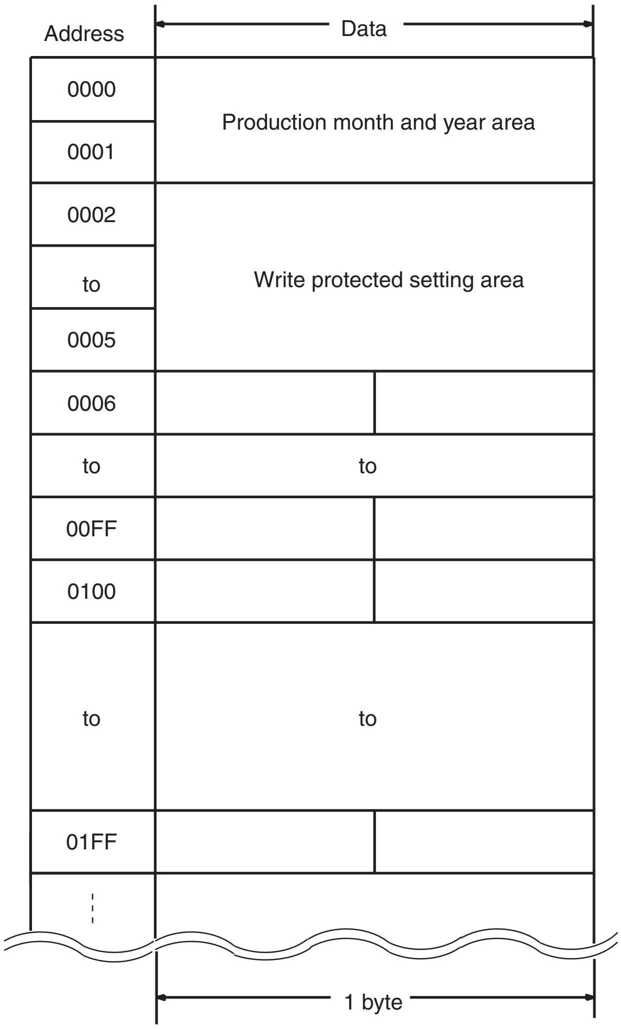
Address
Data
0000
0001
Production month and year area
0002
to
0005
Write protected setting area
0006
to
to
00FF
0100
to
to
01FF
1 byte

2-3-3 Write Protection Function

The write protection function protects the data kept in the Data Carrier from being purged by mistake. We recommend the user to write-protect any important data after the user writes them to the Data Carrier. The write protection method is explained below.

Data Carrier with Memory up to 256 Bytes

Write Protection Method

By writing write protection end address data to address 0000 of the Data Carrier, the area between address 0001 and the end address that has been designated will be write-protected. Whether or not to execute write protection is specified by the leftmost bit of address 0000.

Address	**Bit**							
	7	**6**	**5**	**4**	**3**	**2**	**1**	**0**
0000	Yes/No	End address						

Write protection execution bit (the leftmost bit of address 0000).

1: Write protection (yes)

2: Write protection (no)

End address available range:

00, 01 to 7F

Addresses between 80 to FD cannot be the end address. If the end address is set to 00, addresses 01 to FD will be write-protected. Addresses FE and FF are reserved for the system and the user cannot use these addresses.

Write Protection Example (DC with 254-byte Memory)

1,2,3... 1. In the following example, addresses 0001 to 0012 are write-protected.

Address	**Bit**							
	7	**6**	**5**	**4**	**3**	**2**	**1**	**0**
0000	1	0	0	1	0	0	1	0
	9				2			

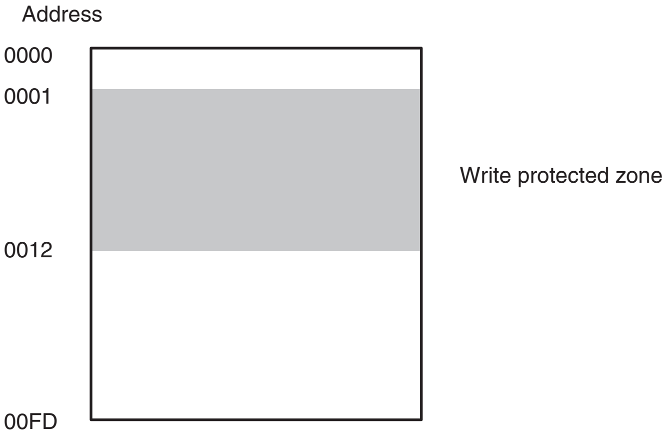

2. If the end address is 00, all areas except address 0000 will be write-protected. In the following example, the end address is set to 00.

Address	**Bit**							
	7	**6**	**5**	**4**	**3**	**2**	**1**	**0**
0000	1	0	0	0	0	0	0	0
	8				0			

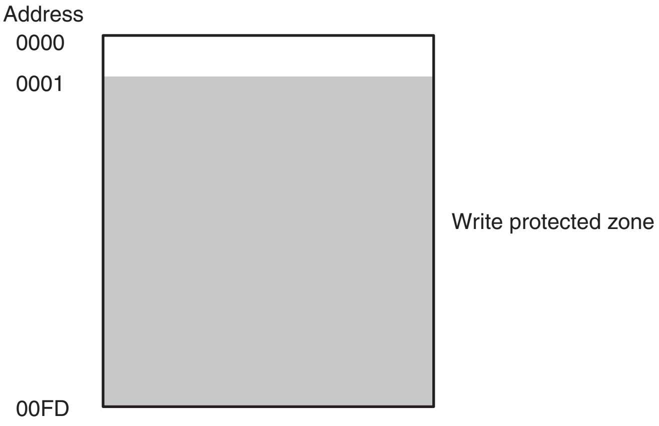

How to Cancel Write Protection

To cancel write protection, set the leftmost bit of address 0000 to 0. When write protection is cancelled, the data in address 0000 will be null and void.

Note a) Address 0000 is never write-protected.

b) Write protection is effective from address 0001 through the succeeding addresses. This means that the user must write any data to be write-protected to address 0001 and the succeeding addresses.

2-3-4 Write Protection Examples

Data written to the Data Carrier can be write-protected. First, write the data to the desired area of the Data Carrier's memory by using Write, then write-protect the area using the procedures described in this section.

Addresses 0002 through 0005 of the Data Carrier's memory are used to enable and clear the write protect function. Set these addresses as follows:

Bit	7	6	5	4	3	2	1	0
Address 0002	Write protect	$X16^3$			$X16^2$			
Address 0003	$X16^1$				$X16^0$			
Address 0004	$X16^3$				$X16^2$			
Address 0005	$X16^1$				$X16^0$			

Write protect beginning address

Setting range: 0006 through 07FF

Write protect end address

Setting range: 0006 through FFFF

When 0800 is set to FFFF; 07FF is assumed.

Bit 7 of address 0002	1	Enables write protect function
	0	Clears write protect function

To clear the write protect function, turn OFF all address bits from 0002 through 0005.

Example 1:

Clearing Write Protection

To disable or clear write protection, turn OFF address bits 0002 through 0007. If the only 0 bit is the 7th bit of address 0002, the write protect function is ignored.

Bit	7	6	5	4	3	2	1	0
Address 0002	0	0	0	0	0	0	0	0
	0				0			
Address 0003	0	0	0	0	0	0	0	0
	0				0			
Address 0004	0	0	0	0	0	0	0	0
	0				0			
Address 0005	0	0	0	0	0	0	0	0
	0				0			

Example 2:
Write-protecting Addresses 0015 through 0120

Setting

Bit	7	6	5	4	3	2	1	0
Address 0002	1	0	0	0	0	0	0	0
	8				0			
Address 0003	0	0	0	1	0	1	0	1
	1				5			
Address 0004	0	0	0	0	0	0	0	1
	0				1			
Address 0005	0	0	1	0	0	0	0	0
	2				0			

Result Data Carrier's memory

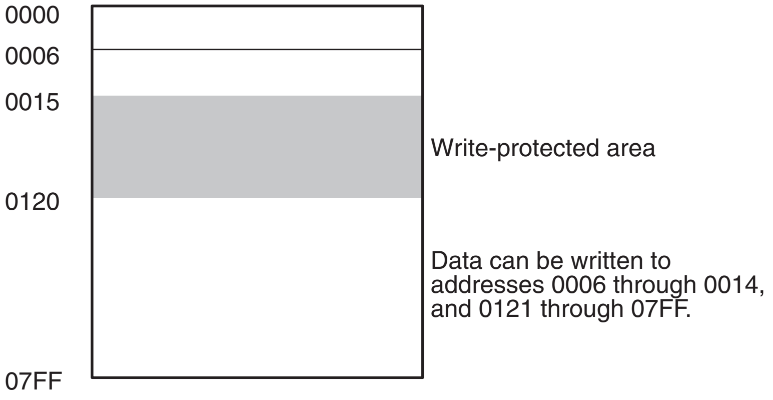
0000
0006
0015
Write-protected area
0120
07FF

Data can be written to addresses 0006 through 0014, and 0121 through 07FF.

Example 3:
Write-protecting Addresses 0700 through 0350

Setting

Bit	7	6	5	4	3	2	1	0
Address 0002	1	0	0	0	0	1	1	1
	8				7			
Address 0003	0	0	0	0	0	0	0	0
	0				0			
Address 0004	0	0	0	0	0	0	1	1
	0				3			
Address 0005	0	1	0	1	0	0	0	0
	5				0			

Result

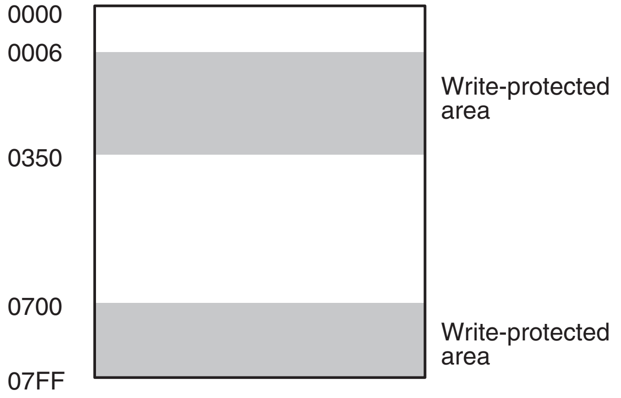
0000
0006
Write-protected area
0350
0700
Write-protected area
07FF

Addresses 0006 through 0350 and 0700 through 07FF are write-protected. Data can be written to addresses 0351 through 06FF.

Example 4: Write-protecting Address 02BE Only

Setting

Bit	7	6	5	4	3	2	1	0
Address 0002	1	0	0	0	0	0	1	0
	8				2			
Address 0003	1	0	1	1	1	1	1	0
	B				E			
Address 0004	0	0	0	0	0	0	1	0
	0				2			
Address 0005	1	0	1	1	1	1	1	0
	B				E			

Result

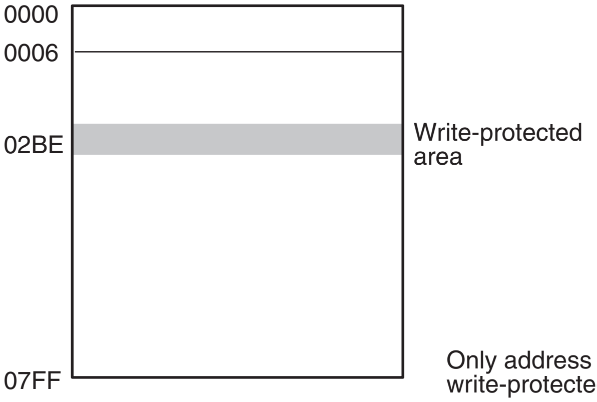
0000
0006
02BE
07FF
Write-protected area

Only address 02BE is write-protected.

Example 5:
Write-protecting Addresses 0600 through 07FF

Setting

Bit	7	6	5	4	3	2	1	0
Address 0002	1	0	0	0	0	1	1	0
	8				6			
Address 0003	0	0	0	0	0	0	0	0
	0				0			
Address 0004	1	1	1	1	1	1	1	1
	F				F			
Address 0005	1	1	1	1	1	1	1	1
	F				F			

Result

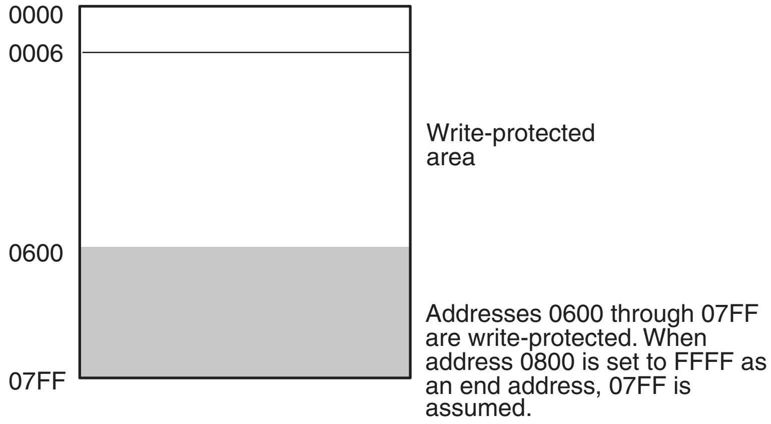

Addresses 0600 through 07FF are write-protected. When address 0800 is set to FFFF as an end address, 07FF is assumed.

How to Cancel Write Protection

To cancel write protection, set the leftmost bit of address 0002 to 0. When write protection is canceled, the data in address 0002 to 0005 will be null and void.

2-3-5 The Data Carrier's Production Date

The Data Carrier's production date is registered in the first 2 bytes (addresses 0000 and 0001) of the Data Carrier's internal memory before shipment from the factory. No data can be written to these two bytes; an attempt to do so will result in a write protect error.

The life of the Data Carrier is approximately 8 years. Develop a program that monitors the Data Carrier's production date and reminds the user to replace it before it becomes unusable.

With the user program in the CPU or a Host Computer, execute Read in order to read the date of production and monitor the life of the Data Carrier.

The date of production is registered in the following format:

Bit	7	6	5	4	3	2	1	0
Address 0000	Higher digit of month				Lower digit of month			
Address 0001	Higher digit of year				Lower digit of year			

Note Only the last 2 digits of the year are registered.

The following figures show examples of registered dates:

March 1988

Bit	7	6	5	4	3	2	1	0
Address 0000	0				3			
Address 0001	8				8			

December 1990

Bit	7	6	5	4	3	2	1	0
Address 0000	1				2			
Address 0001	9				0			

2-3-6 Detection of Data Carrier's Life

The detecting method of the Data Carrier's life varies with the kind of memory (SRAM or EEPROM) incorporated by the Data Carrier. In the case of the Data Carrier with SRAM, the life of the built-in battery will be checked. In the case of the Data Carrier with EEPROM, the number of overwriting operations (possible up to 100,000 times or a desired number of operations) will be checked.

Data Carrier with SRAM (Built-in Battery)

Battery Voltage Check

1,2,3...

1. The voltage of the Data Carrier's built-in battery can be checked only if the user reads the two-byte data in addresses 0000 to 0001. The Data Carrier is not designed so that the voltage is automatically checked, because at the time of battery check, a certain amount of current flows through the internal circuitry of the Data Carrier, which in turn consumes the electricity of the battery. We recommend the user to make a program so that the voltage of the battery can be checked once a day.

   Battery Low Check Execution Command

   a) Read command

   b) Auto read command

2. When the voltage of the battery is low, the DC Warning Flag (word n+4 bit 7) will be turned ON.

Data Carrier's Life after Generation of Battery Low Signal

Replace the Data Carrier with a new one as soon as possible when the battery low signal is turned ON, even though the Data Carrier can be used for approximately one month after its battery low signal is turned ON.

Data Carrier with EEPROM (With No Battery)

By counting the number of overwriting operations, it is possible to check the life of the Data Carrier's EEPROM. The Data Carrier's EEPROM allows a total of 100,000 or a desired number of overwriting operations.

⚠ WARNING Do not throw the Data Carrier into fire or heat the Data Carrier to a temperature exceeding 100°C. Doing so may cause ignition or burning of the built-in lithium battery.

⚠ WARNING Do not short the battery terminals or charge, disassemble, heat, or incinerate the battery. Doing any of these may result in leakage, rupture, heat generation, or ignition of the battery.

Note The Data Carrier with SRAM incorporates a thionyl chloride lithium battery. The internal resistance of the thionyl chloride lithium battery will rise if the battery is not used for several months, in which case, the Data Carrier will generate a battery low signal if a battery check is carried out (even if the battery is not low). When using a Data Carrier that has not been used for over a month, carry out some trial operations for approximately 10 minutes in order to reactivate the battery. The trial operations will not significantly shorten the life of the battery.

SECTION 3
Programming

This section describes programming and includes example programs that illustrate data transfer between the Unit and the CPU. Monitoring functions and timing considerations are also covered in this section.

3-1 Program Examples 40
  3-1-1 Writing to the Data Carrier 40
  3-1-2 Reading from the Data Carrier 43
3-2 Monitoring 51
  3-2-1 Connecting the Handheld Programming Console 51
  3-2-2 Mode Setting. 52
  3-2-3 The JOB Function. 56
  3-2-4 Address/Data Setting 59
  3-2-5 Read 62
  3-2-6 Step Write (WRITE 1) 63
  3-2-7 Continuous Write (WRITE 2). 64
  3-2-8 Monitor Test (TEST) 65
  3-2-9 Error Log Display (ERR) 66
  3-2-10 Error Codes. 70
3-3 Timing Considerations 70
  3-3-1 Command Processing Time 70
  3-3-2 Turnaround Time 72

Section Overview

This section contains example programs that illustrate data transfer between the ID Sensor Unit and the CPU of the PC. Six communication commands (Write, Auto Write, Read, Auto Read, Clear-all, and Auto Read/Write Abort) can be used.

Also included in this section are a description of Monitoring functions and an explanation of Command Processing Time and Turnaround Time.

3-1 Program Examples

The following conditions apply to the example programs in this section:

1,2,3...

1. The ID Sensor Unit unit number switch is set to 0.
2. The command data is stored in the DM area of the CPU.

Refer to *2-3 The User Program* for an overview of program operation.

3-1-1 Writing to the Data Carrier

This section illustrates program examples of the Write, Auto Write, and Clear-all commands.

Program Example 1: The Write Command

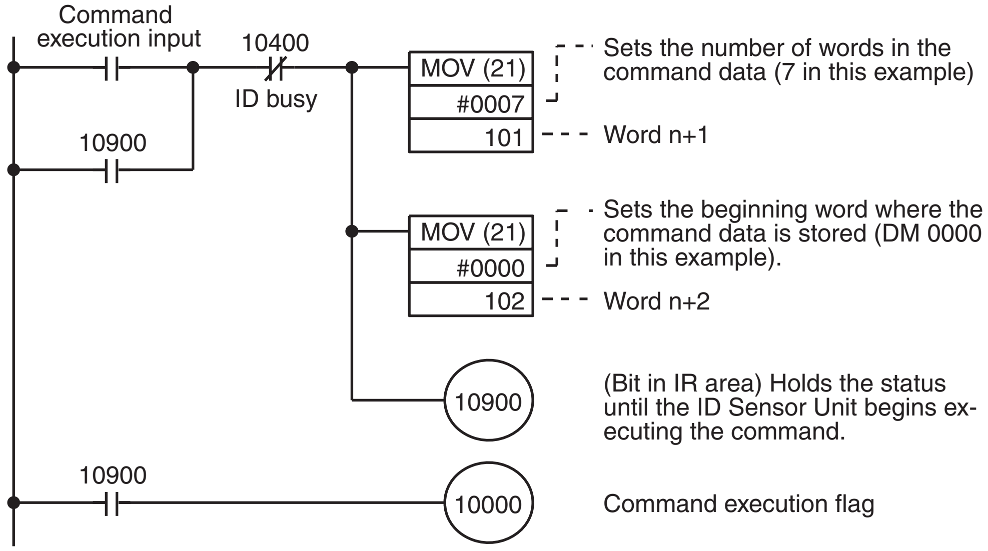
Command execution input
10400
ID busy
10900
MOV (21)
#0007
101
Sets the number of words in the command data (7 in this example)
Word n+1
MOV (21)
#0000
102
Sets the beginning word where the command data is stored (DM 0000 in this example).
Word n+2
10900
(Bit in IR area) Holds the status until the ID Sensor Unit begins executing the command.
10900
10000
Command execution flag

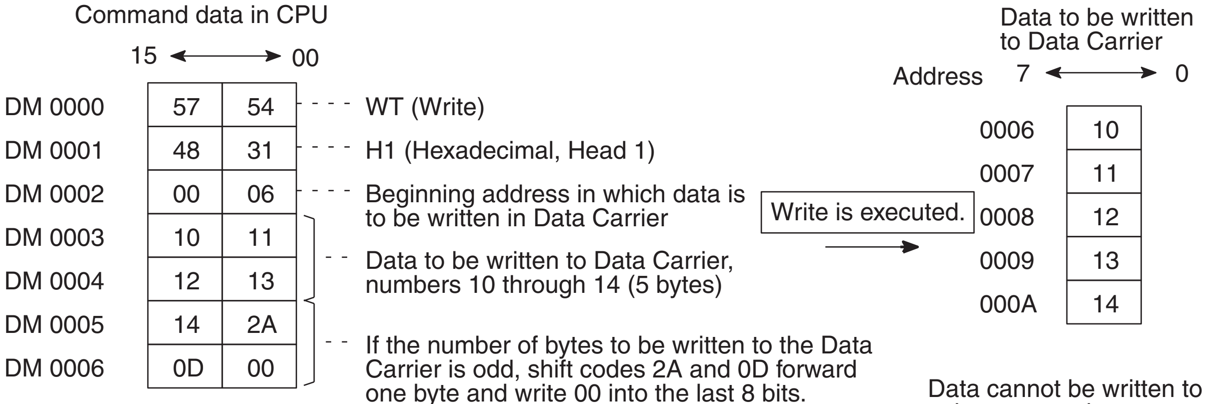
Command data in CPU
15 ⟷ 00
Write is executed.
Data to be written to Data Carrier
Address 7 ⟷ 0

	15	00	
DM 0000	57	54	WT (Write)
DM 0001	48	31	H1 (Hexadecimal, Head 1)
DM 0002	00	06	Beginning address in which data is to be written in Data Carrier
DM 0003	10	11	Data to be written to Data Carrier, numbers 10 through 14 (5 bytes)
DM 0004	12	13	
DM 0005	14	2A	If the number of bytes to be written to the Data Carrier is odd, shift codes 2A and 0D forward one byte and write 00 into the last 8 bits.
DM 0006	0D	00	

Address	7 ⟷ 0
0006	10
0007	11
0008	12
0009	13
000A	14

Data cannot be written to write-protected areas.

Operation

When the command execution input is ON, the number of words in the command (7) and the beginning word where the command is stored (DM 0000) are set using MOV, and the command execution flag (10000) is turned ON.

IR 10900 holds this status until the ID Sensor Unit begins executing the command. While the ID Sensor Unit is executing the command, the ID Busy flag (word n+4 bit 00) is set to ON. When the write operation is complete, the ID Busy flag turns OFF.

Although the ID Busy flag normally turns OFF upon completion of the command, if the command execution flag is ON at this time, the ID Busy flag will stay ON. Therefore, design the program so that the command execution flag will be turned OFF when the ID Busy flag turns ON, as in the example.

Program Example 2: The Auto Write Command

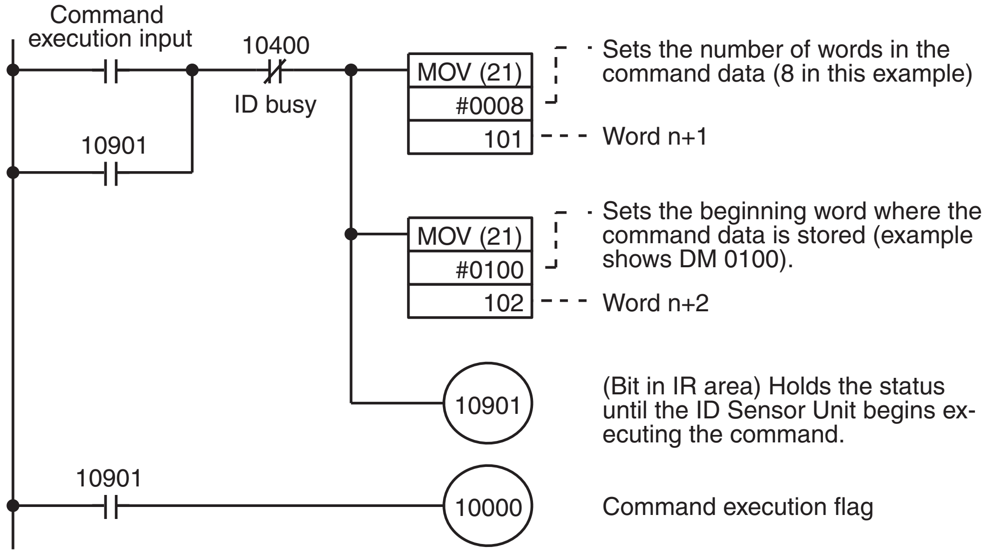

Sets the number of words in the command data (8 in this example)

Word n+1

Sets the beginning word where the command data is stored (example shows DM 0100).

Word n+2

(Bit in IR area) Holds the status until the ID Sensor Unit begins executing the command.

Command execution flag

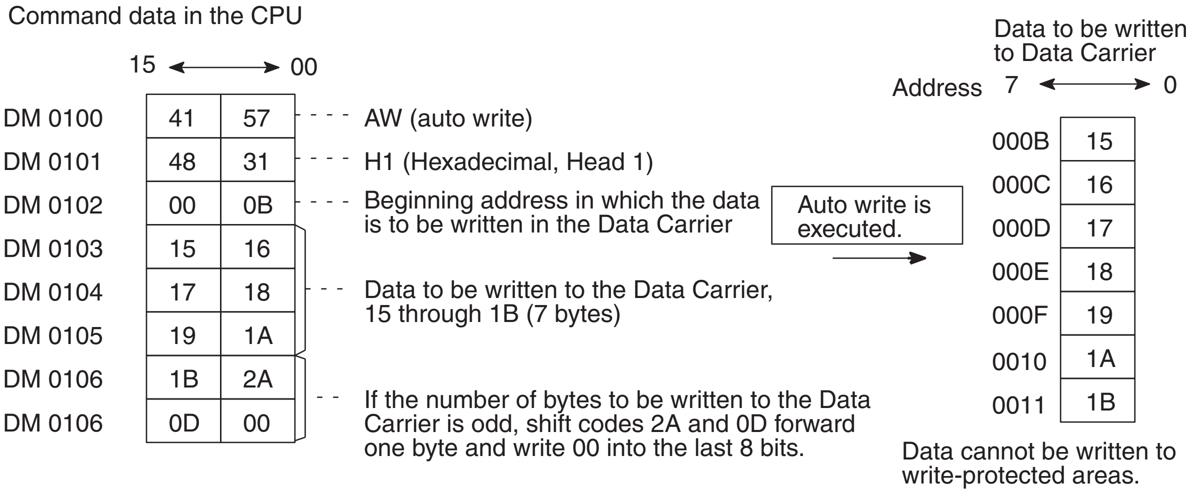

	15	00	
DM 0100	41	57	AW (auto write)
DM 0101	48	31	H1 (Hexadecimal, Head 1)
DM 0102	00	0B	Beginning address in which the data is to be written in the Data Carrier
DM 0103	15	16	Data to be written to the Data Carrier, 15 through 1B (7 bytes)
DM 0104	17	18	
DM 0105	19	1A	
DM 0106	1B	2A	If the number of bytes to be written to the Data Carrier is odd, shift codes 2A and 0D forward one byte and write 00 into the last 8 bits.
DM 0106	0D	00	

Address	7 ↔ 0
000B	15
000C	16
000D	17
000E	18
000F	19
0010	1A
0011	1B

Data cannot be written to write-protected areas.

Operation

When the command execution input is ON, the number of words in the command (8) and the beginning word where the command data is stored (DM 0100) are set using MOV, and the command execution flag (10000) is turned ON. IR 10901 holds this status until the ID Sensor Unit starts executing the command.

While the ID Sensor Unit is executing the command, the ID Busy flag (word n+4 bit 00) is turned ON. When the Auto Write operation is complete, the ID Busy flag turns OFF.

While the ID Sensor Unit is waiting for the Data Carrier to approach the antenna, the Data Carrier waiting flag (word n+4 bit 01) is ON.

Although the ID Busy flag normally turns OFF upon completion of the command, if the command execution flag is ON at this time, the ID Busy flag will stay ON. Therefore, design the program so that the command execution flag will be turned OFF when the ID Busy flag turns ON, as in the example.

Program Example 3: The Clear-all Command

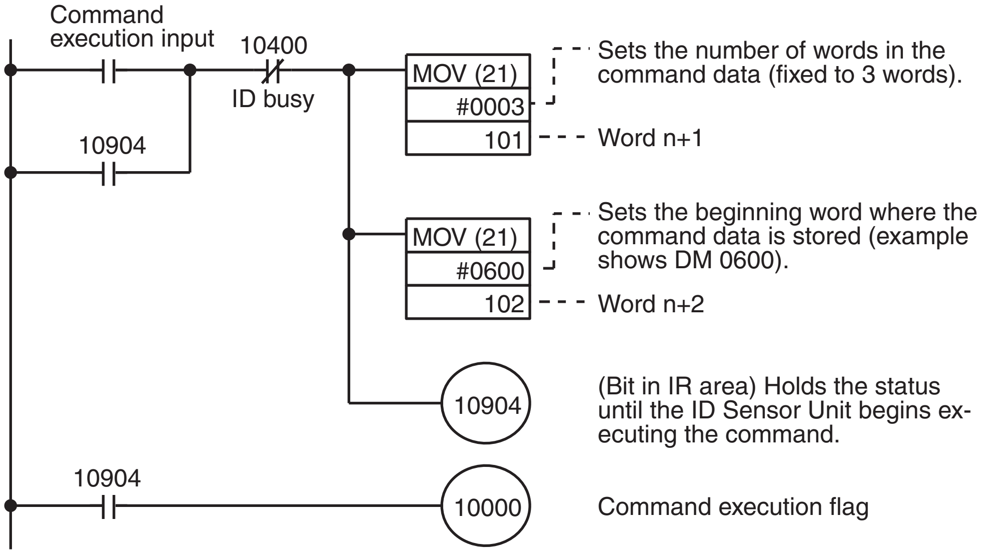
Command execution input
10400
ID busy
10904
MOV (21)
#0003
101
Sets the number of words in the command data (fixed to 3 words).
Word n+1
MOV (21)
#0600
102
Sets the beginning word where the command data is stored (example shows DM 0600).
Word n+2
10904
(Bit in IR area) Holds the status until the ID Sensor Unit begins executing the command.
10904
10000
Command execution flag

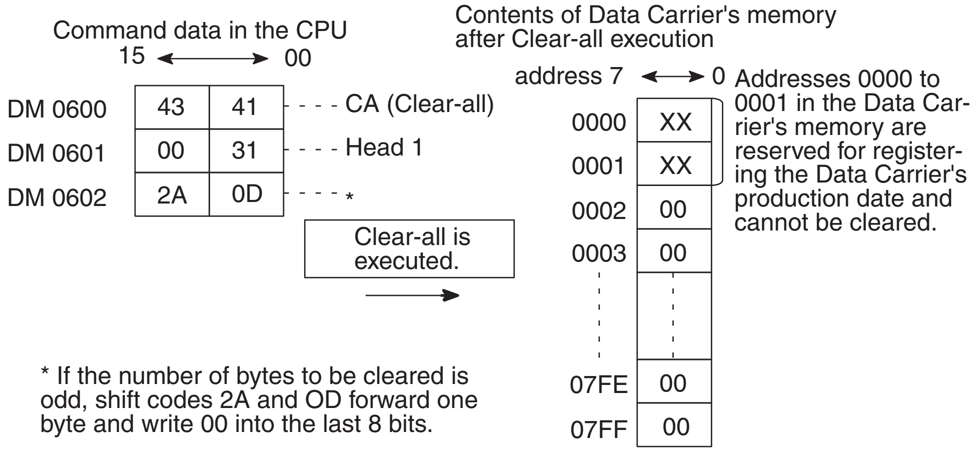
Command data in the CPU
15
00
DM 0600
43
41
CA (Clear-all)
DM 0601
00
31
Head 1
DM 0602
2A
0D
*
Clear-all is executed.
Contents of Data Carrier's memory after Clear-all execution
address 7
0
0000
XX
0001
XX
0002
00
0003
00
07FE
00
07FF
00
Addresses 0000 to 0001 in the Data Carrier's memory are reserved for registering the Data Carrier's production date and cannot be cleared.

* If the number of bytes to be cleared is odd, shift codes 2A and OD forward one byte and write 00 into the last 8 bits.

Operation

When the command execution input is ON, the number of words in the command (fixed to 3 words) and the beginning word where the command is stored (DM 0600) are set using MOV, and the command execution flag (10000) is set turned ON. IR (10904) keeps the status until the ID Sensor Unit begins executing the command.

While the ID Sensor Unit is executing the command, the ID Busy flag (word n+4 bit 00) is turned ON. When the Clear-all operation is complete, the ID Busy flag turns OFF.

Although the ID Busy flag normally turns OFF upon completion of the command, if the command execution flag is ON at this time, the ID Busy flag will stay ON. Therefore, design the program so that the command execution flag will be turned OFF when the ID Busy flag turns ON, as in the example.

Note Clearall clears all memory areas, including those that are write-protected.

3-1-2 Reading from the Data Carrier

This section shows program examples for the Read and Auto Read commands.

Program Example 4: The Read Command

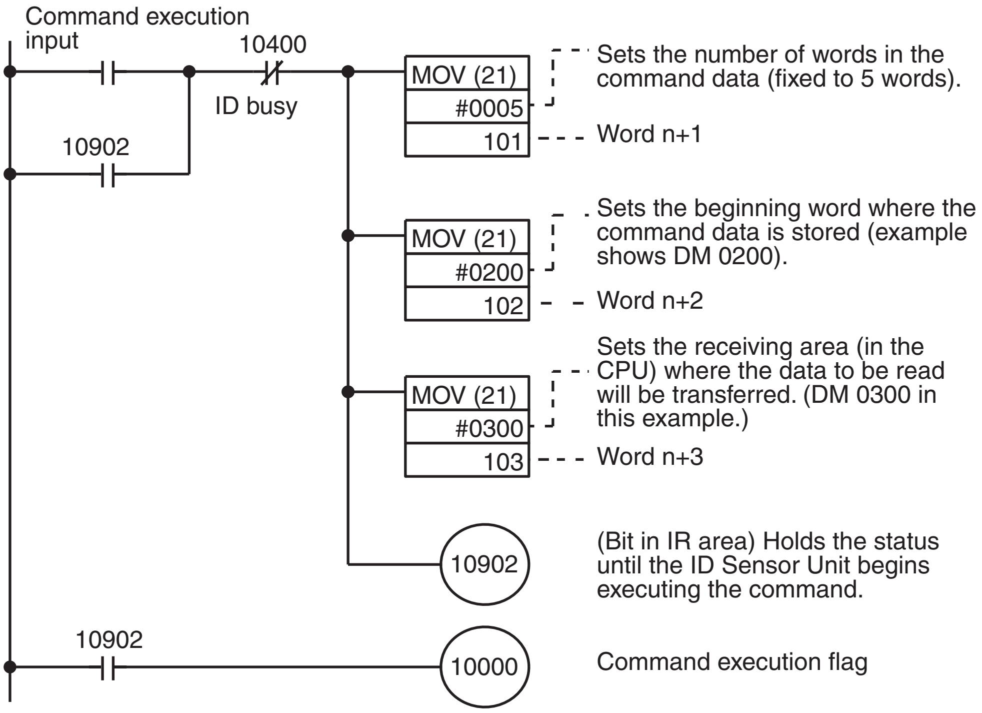

Sets the number of words in the command data (fixed to 5 words).

Word n+1

Sets the beginning word where the command data is stored (example shows DM 0200).

Word n+2

Sets the receiving area (in the CPU) where the data to be read will be transferred. (DM 0300 in this example.)

Word n+3

(Bit in IR area) Holds the status until the ID Sensor Unit begins executing the command.

Command execution flag

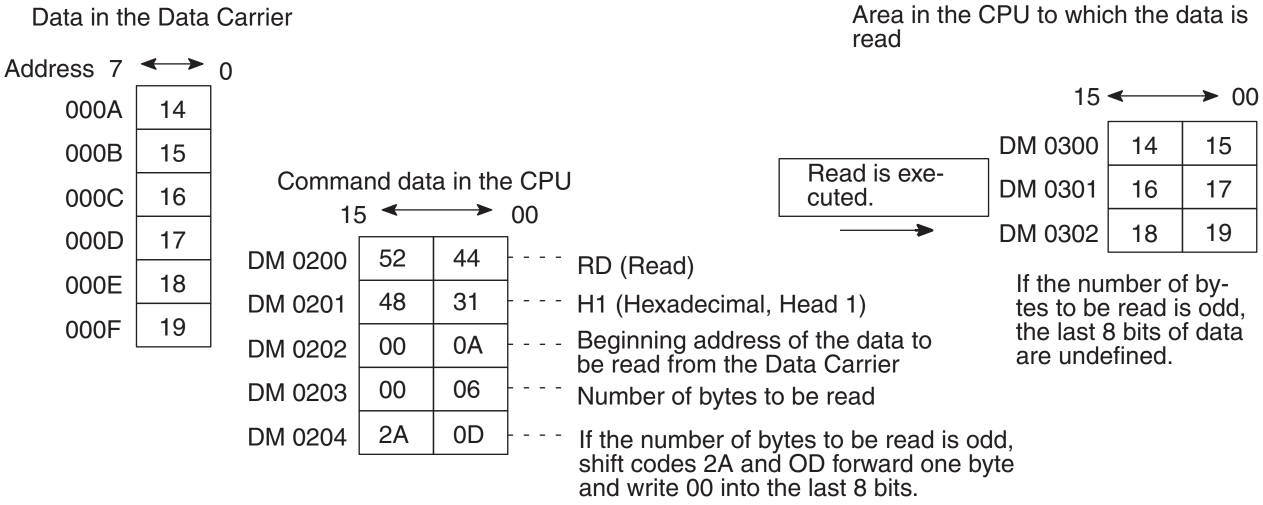

Data in the Data Carrier

Address	7 ↔ 0
000A	14
000B	15
000C	16
000D	17
000E	18
000F	19

Command data in the CPU

	15	00	
DM 0200	52	44	RD (Read)
DM 0201	48	31	H1 (Hexadecimal, Head 1)
DM 0202	00	0A	Beginning address of the data to be read from the Data Carrier
DM 0203	00	06	Number of bytes to be read
DM 0204	2A	0D	If the number of bytes to be read is odd, shift codes 2A and OD forward one byte and write 00 into the last 8 bits.

Area in the CPU to which the data is read

	15	00
DM 0300	14	15
DM 0301	16	17
DM 0302	18	19

If the number of bytes to be read is odd, the last 8 bits of data are undefined.

Operation

When the execution command input is ON, the number of words in the command (fixed to 5 words), the beginning word where the command is stored (DM 0200), and the beginning word number of the receiving area in the CPU are set using MOV, and the command execution flag (10000) is turned ON. IR

10902 holds this status until the ID Sensor Unit begins executing the command.

While the ID Sensor Unit is executing the command, the ID Busy flag (word n+4 bit 00) is turned ON. When the Read operation is complete, the ID Busy flag turns OFF.

Although the ID Busy flag normally turns OFF upon completion of the command, if the command execution flag is ON at this time, the ID Busy flag will stay ON. Therefore, design the program so that the command execution flag will be turned OFF when the ID Busy flag turns ON, as in the example.

Program Example 5: The Auto Read Command

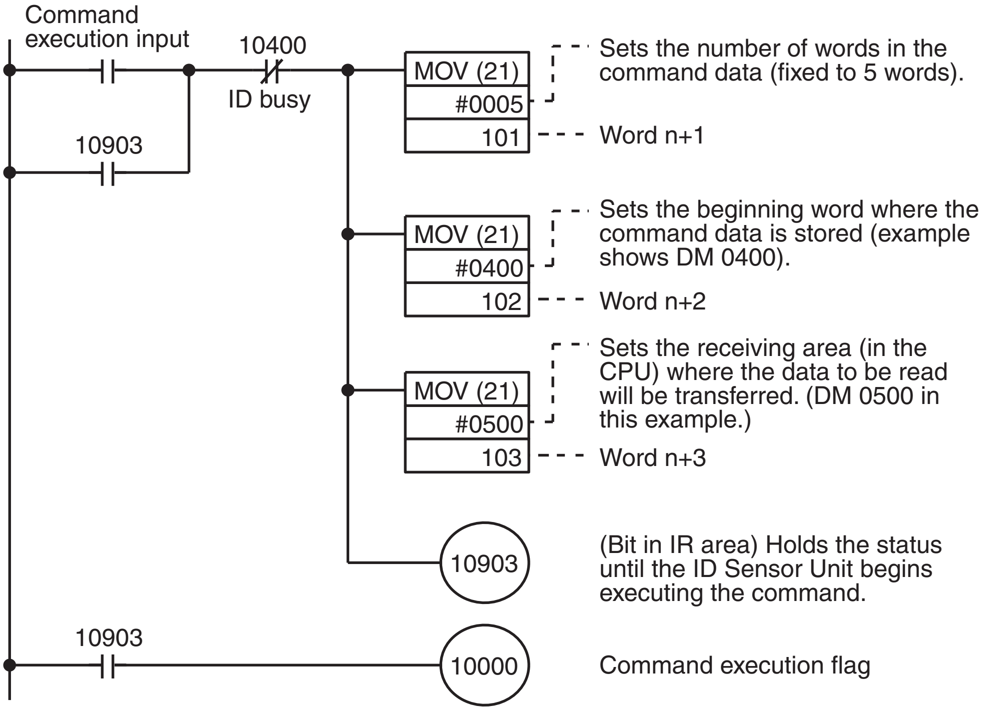
Command execution input
10400
ID busy
10903
MOV (21)
#0005
101
Sets the number of words in the command data (fixed to 5 words).
Word n+1
MOV (21)
#0400
102
Sets the beginning word where the command data is stored (example shows DM 0400).
Word n+2
MOV (21)
#0500
103
Sets the receiving area (in the CPU) where the data to be read will be transferred. (DM 0500 in this example.)
Word n+3
10903
(Bit in IR area) Holds the status until the ID Sensor Unit begins executing the command.
10903
10000
Command execution flag

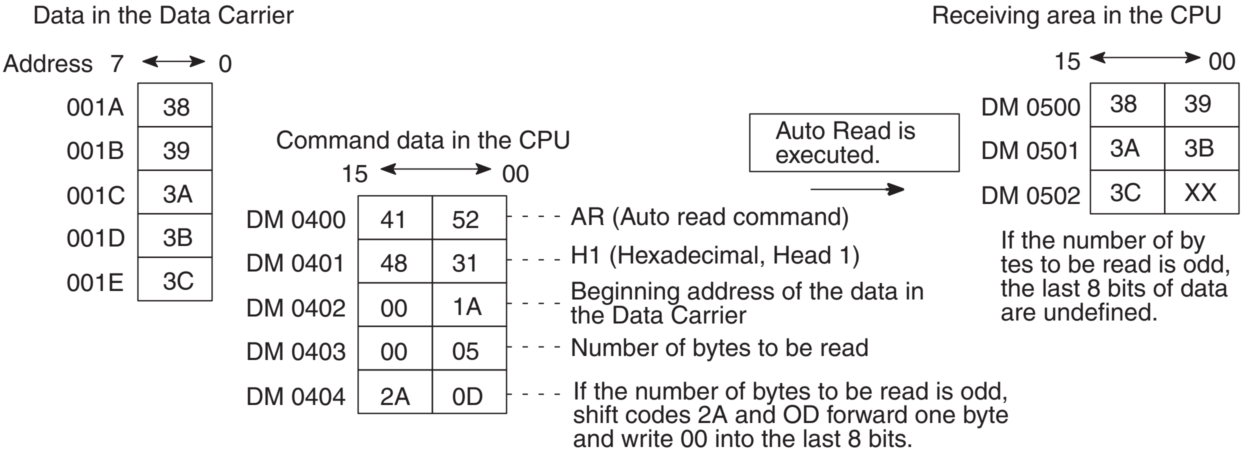
Data in the Data Carrier

Address (7 ↔ 0)	
001A	38
001B	39
001C	3A
001D	3B
001E	3C

Command data in the CPU

	15	00	
DM 0400	41	52	AR (Auto read command)
DM 0401	48	31	H1 (Hexadecimal, Head 1)
DM 0402	00	1A	Beginning address of the data in the Data Carrier
DM 0403	00	05	Number of bytes to be read
DM 0404	2A	0D	If the number of bytes to be read is odd, shift codes 2A and OD forward one byte and write 00 into the last 8 bits.

Auto Read is executed. →

Receiving area in the CPU

	15	00
DM 0500	38	39
DM 0501	3A	3B
DM 0502	3C	XX

If the number of bytes to be read is odd, the last 8 bits of data are undefined.

Operation

When the command execution is ON, the number of words in the command (fixed to 5), the beginning word where the command is stored (DM 0400), and the beginning word of the receiving area in the CPU (DM 0500) are set using MOV, and the command execution flag (10000) is turned ON. IR 10900 holds this status until the ID Sensor Unit begins executing the command.

While the ID Sensor Unit is executing the command, the ID Busy flag (word n+4 bit 00) is turned ON. When Auto Write is complete, the ID Busy flag turns OFF. While the ID Sensor Unit is waiting for the Data Carrier to approach, the data Carrier waiting flag (word n+4 bit 01) is ON.

Although the ID Busy flag normally turns OFF upon completion of the command, if the command execution flag is ON at this time, the ID Busy flag will stay ON. Therefore, design the program so that the command execution flag will be turned OFF when the ID Busy flag turns ON, as in the example.

Program Example 6: The Auto Read/Write Abort Command

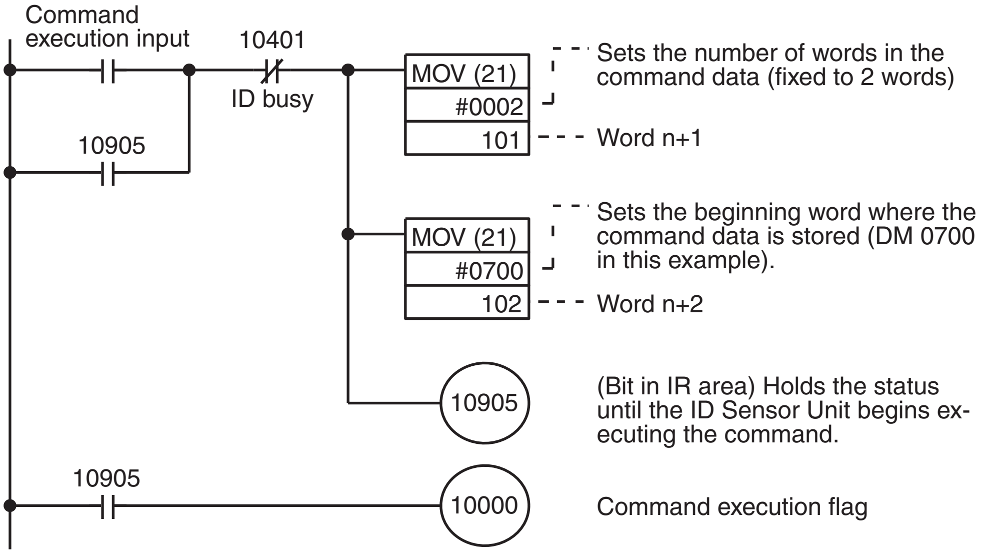

Sets the number of words in the command data (fixed to 2 words)

Word n+1

Sets the beginning word where the command data is stored (DM 0700 in this example).

Word n+2

(Bit in IR area) Holds the status until the ID Sensor Unit begins executing the command.

Command execution flag

Command data in the CPU

15 ←→ 00

DM 0700	41	41	AA (Auto Read/Write Abort)
DM 0701	00	31	If the number of bytes to be read is odd, shift codes 00 and 31 forward one byte and write 00 into the last 8 bits.

Operation

When the execution command input is ON, the number of words in the command (fixed to 2 words) and the beginning word where the command is stored (DM 0700) are set using MOV, and the command execution flag (10000) is turned ON. IR (10905) holds the status until the ID Sensor Unit aborts the auto command (i.e. the Data Carrier waiting flag is OFF).

While the ID Sensor Unit is executing the command, the Data Carrier waiting flag (word n+4 bit 01) and the ID Busy flag (word n+4 bit 00) are turned OFF. The Auto Read/Write Abort end flag (word n+4 bit 02) is turned ON, signifying completion of the operation.

Although the ID Busy flag normally turns OFF upon completion of the command, if the command execution flag is ON at this time, the ID Busy flag will stay ON. Therefore, design the program so that the command execution flag will be turned OFF when the DC waiting flag turns OFF, as in the example.

Program Example 7: Calculation and Writing of Data Carrier's Data Check Code

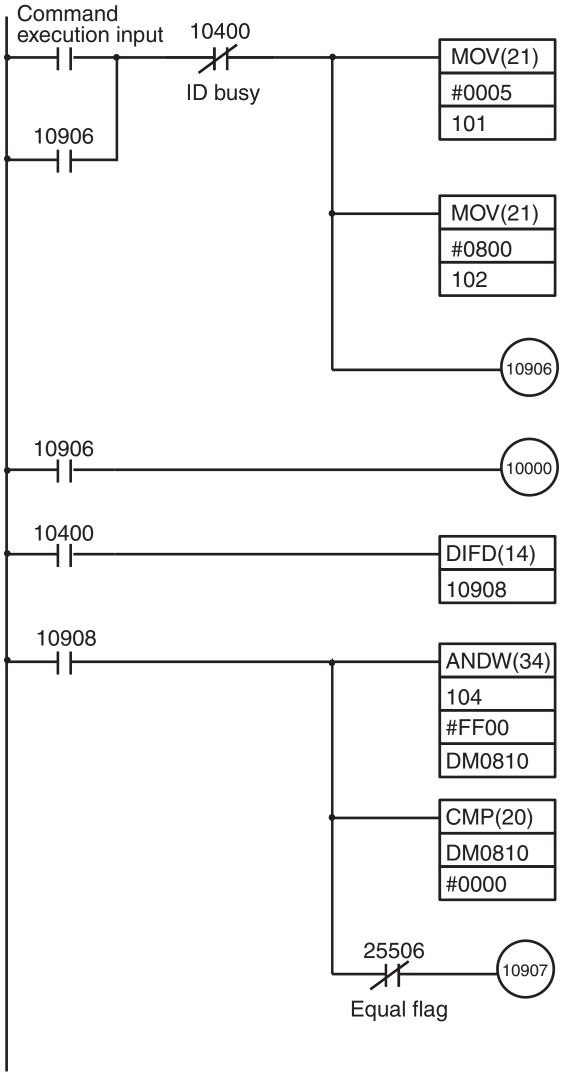
Command execution input
10400
ID busy
10906
MOV(21)
#0005
101
MOV(21)
#0800
102
10906
10906
10000
10400
DIFD(14)
10908
10908
ANDW(34)
104
#FF00
DM0810
CMP(20)
DM0810
#0000
25506
Equal flag
10907

Sets the number of words in the command data to 5 words.

Sets the beginning word where the command data is stored to DM 0800.

Holds the status until the ID Sensor Unit begins executing the command.

Command execution flag

Processing end

Judges the result of processing

Command error output

Command Data in the CPU

	15 ←	→ 00
DM 0800	4D	44
DM 0801	4B	31
DM 0802	00	10
DM 0803	00	20
DM 0804	2A	0D

Data in the Data Carrier

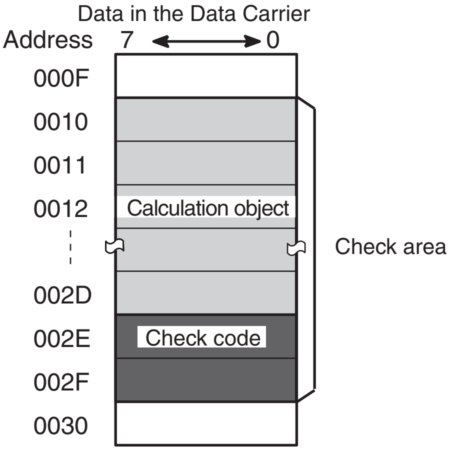
Address
7
0
000F
0010
0011
0012
Calculation object
002D
002E
Check code
002F
0030
Check area

Operation

When the command execution input is ON, the number of words in the command (5) and the beginning word where the command is stored (DM 0800) are set using MOV, and the command execution flag (10000) is turned ON.

IR 10906 holds this status until the ID Sensor Unit begins executing the command. While the ID Sensor Unit is executing the command, the ID Busy flag (word n+4 bit 00) is set to ON. When the write operation is completed, the ID Busy flag turns OFF.

When the write operation has been completed, the result can be checked with an error flag. If there has been an error, the Command Error Output (10907) turns ON.

Note Although the ID Busy flag normally turns OFF upon completion of the command, if the command execution flag is ON at this time, the ID Busy flag will stay ON. Therefore, design the program so that the command execution flag will be turned OFF when the ID Busy flag turns ON, as in the example.

Program Example 8: Collating Check Code of Data Carrier's Data

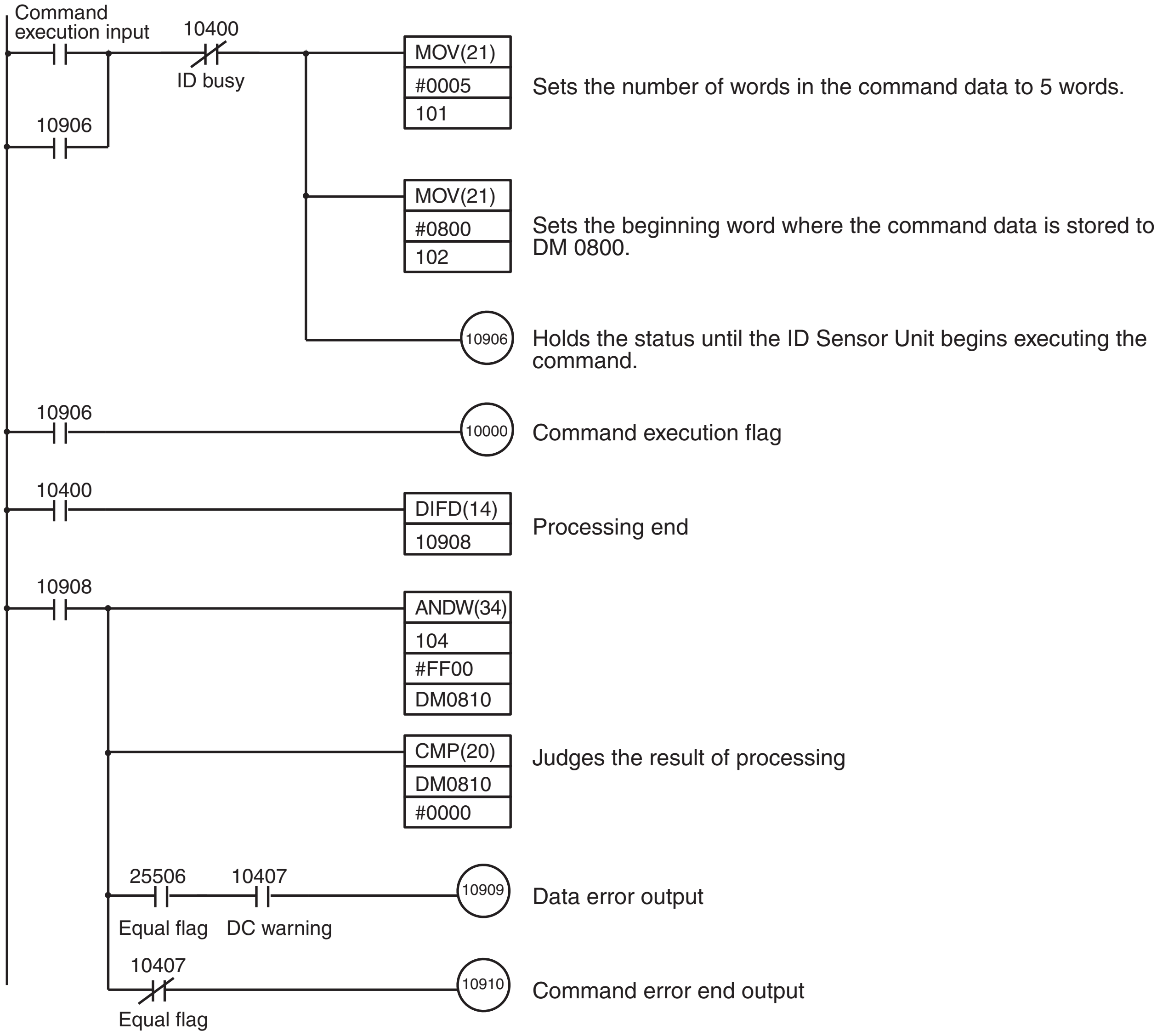
Command execution input
10400
ID busy
10906
MOV(21)
#0005
101
Sets the number of words in the command data to 5 words.
MOV(21)
#0800
102
Sets the beginning word where the command data is stored to DM 0800.
10906
Holds the status until the ID Sensor Unit begins executing the command.
10906
10000
Command execution flag
10400
DIFD(14)
10908
Processing end
10908
ANDW(34)
104
#FF00
DM0810
CMP(20)
DM0810
#0000
Judges the result of processing
25506
Equal flag
10407
DC warning
10909
Data error output
10407
Equal flag
10910
Command error end output

Command Data in the CPU

	15	00
DM 0800	4D	44
DM 0801	4B	31
DM 0802	00	10
DM 0803	00	20
DM 0804	2A	0D

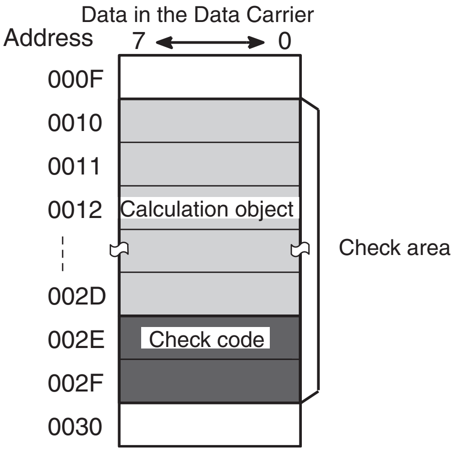
Data in the Data Carrier
Address
7
0
000F
0010
0011
0012
Calculation object
002D
002E
Check code
002F
0030
Check area

Operation

When the command execution input is ON, the number of words in the command (5) and the beginning word where the command is stored (DM 0800) are set using MOV, and the command execution flag (10000) is turned ON.

IR 10906 holds this status until the ID Sensor Unit begins executing the command. While the ID Sensor Unit is executing the command, the ID Busy flag (word n+4 bit 00) is set to ON. When the write operation is completed, the ID Busy flag turns OFF.

When the write operation has been completed, the result can be checked with an error flag. If the write operation has been completed normally and the DC Warning Flag (10407) has been turned ON, the Data Error Output (10909) will be turned ON. If there has been an error, the Command Error Output (10910) turns ON.

Note Although the ID Busy flag normally turns OFF upon completion of the command, if the command execution flag is ON at this time, the ID Busy flag will stay ON. Therefore, design the program so that the command execution flag will be turned OFF when the ID Busy flag turns ON, as in the example.

Program Example 9: Checking Number of Overwriting Operations on Data Carrier

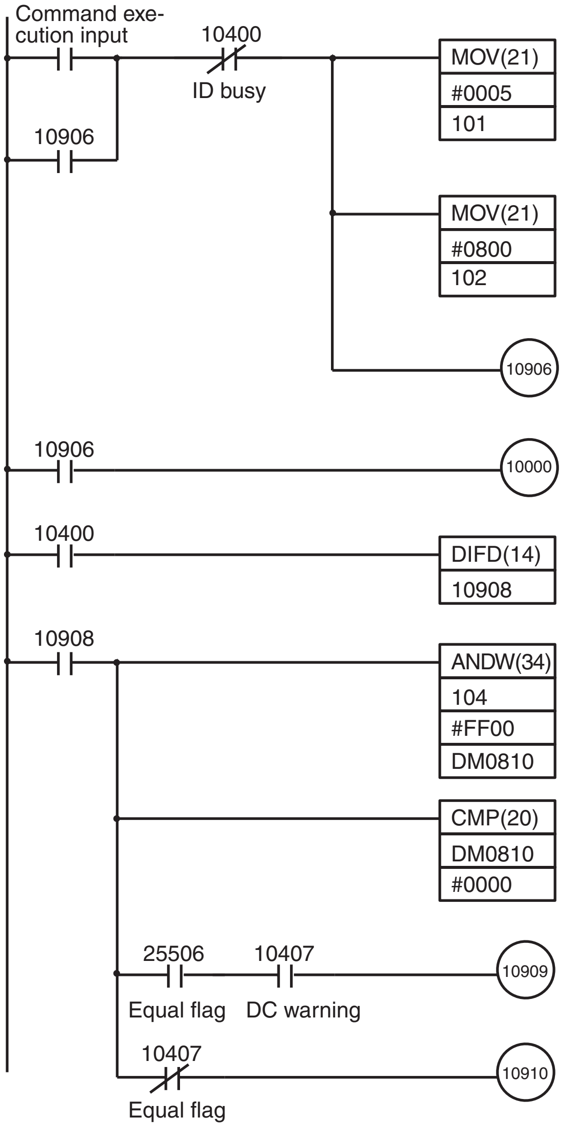
Command execution input
10400
ID busy
10906
MOV(21)
#0005
101
MOV(21)
#0800
102
10906
10906
10000
10400
DIFD(14)
10908
10908
ANDW(34)
104
#FF00
DM0810
CMP(20)
DM0810
#0000
25506
10407
Equal flag
DC warning
10909
10407
Equal flag
10910

Sets the number of words in the command data to 5 words.

Sets the beginning word where the command data is stored to DM 0800.

Holds the status until the ID Sensor Unit begins executing the command.

Command execution flag

Processing end

Judges the result of processing

Output for excessive overwriting operations

Command error end output

Command Data of PC when using MD-L Command

	15 ←→	00
DM 0800	4D	44
DM 0801	4C	31
DM 0802	00	80
DM 0803	00	10
DM 0804	2A	0D

Command Data of PC when using MD-S Command

	15 ←→	00	
DM 0800	4D	44	- - - MD
DM 0801	53	31	- - - S1
DM 0802	00	80	
DM 0803	00	01	
DM 0804	2A	0D	- - * ↵

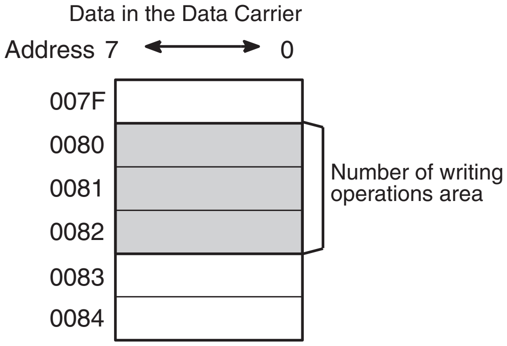
Data in the Data Carrier
Address 7 ←→ 0
007F
0080
0081
0082
0083
0084
Number of writing operations area

Note When using the MD-S command, write in advance the number of overwriting operations onto the number of writing operations area using the write command. It will be “0493E0” for a DC with the number of overwriting operations set for 300,000 operations.

Operation

When the command execution input is ON, the number of words in the command (5) and the beginning word where the command is stored (DM 0800) are set using MOV, and the command execution flag (10000) is turned ON.

IR 10906 holds this status until the ID Sensor Unit begins executing the command. While the ID Sensor Unit is executing the command, the ID Busy flag (word n+4 bit 00) is set to ON. When the write operation is completed, the ID Busy flag turns OFF.

When the write operation has been completed, the result can be checked with an error flag. If the write operation has been completed normally and the DC Warning Flag (10407) has been turned ON, the Data Error Output (10909) will be turned ON. If there has been an error, the Command Error Output (10910) turns ON.

Note Although the ID Busy flag normally turns OFF upon completion of the command, if the command execution flag is ON at this time, the ID Busy flag will stay ON. Therefore, design the program so that the command execution flag will be turned OFF when the ID Busy flag turns ON, as in the example.

3-2 Monitoring

This section explains the use of the Handheld Programming Console to monitor data communication between the ID Sensor and the Data Carrier and to monitor errors.

Except where otherwise noted, the operations covered in this section can only be performed while the Handheld Programming Console is in MONITOR mode.

3-2-1 Connecting the Handheld Programming Console

Use the C200H-PRO27E Handheld Programming Console to monitor the operations of the ID Sensor Unit. Before connecting the Programming Console to the ID Sensor Unit, turn OFF the power to the PC.

Use the optional C200H-CN222 (2 m) or C200H-CN422 (4 m) connecting cable to connect the Handheld Programming Console to the ID Sensor Unit. Connect the cable to the connector labeled “MONITOR” on the front panel of the ID Sensor Unit.

Refer to the connection diagram on page 2.

Attaching the Keyboard Sheet

Attach the keyboard sheet (provided with the ID Sensor Unit as an accessory) as shown in the following figure.

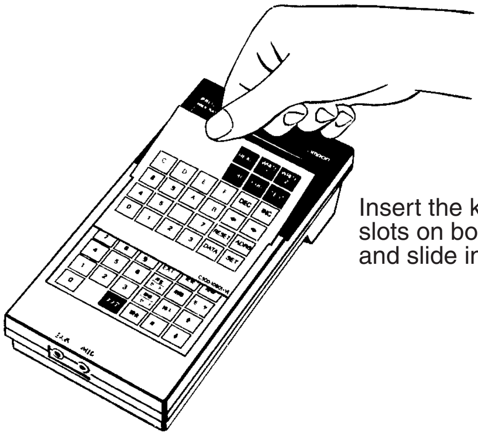

Insert the keyboard sheet into the slots on both sides of the keyboard, and slide into place.

3-2-2 Mode Setting

The Handheld Programming Console can be operated in three modes; the functions and applications of these modes are outlined in the following table. Use the Mode selector switch on the Handheld Programming Console to select the mode.

Note that these modes apply only to the ID Sensor Unit; they do not apply to the CPU.

Programming Console Key Layout

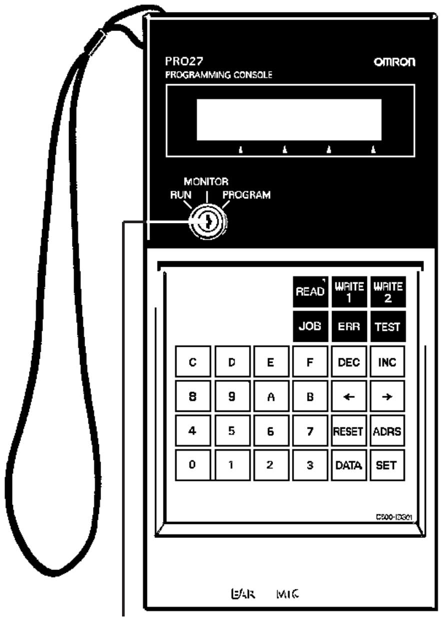
PRO27
PROGRAMMING CONSOLE
omron
MONITOR
RUN
PROGRAM
READ
WRITE 1
WRITE 2
JOB
ERR
TEST
C
D
E
F
DEC
INC
8
9
A
B
←
→
4
5
6
7
RESET
ADRS
0
1
2
3
DATA
SET
C500-IDS01
EAR
MIC

Mode selector switch

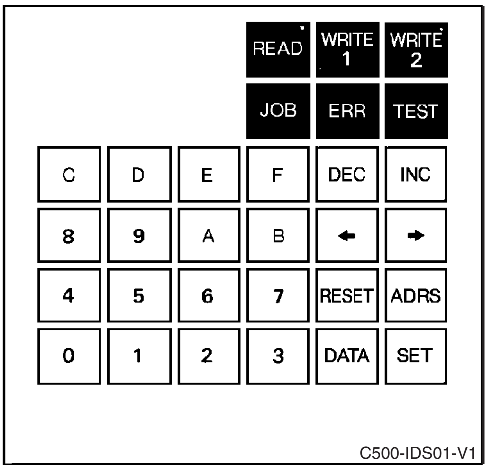
READ
WRITE 1
WRITE 2
JOB
ERR
TEST
C
D
E
F
DEC
INC
8
9
A
B
←
→
4
5
6
7
RESET
ADRS
0
1
2
3
DATA
SET
C500-IDS01-V1

Programming Console Modes

Mode	Function		Application
RUN	In this mode, the CPU transfers data to and from the Data Carrier according to the program in the CPU. It is a normal operating mode only; no key input is possible.		Set the ID Sensor to RUN mode for normal operation.
MONITOR	In this mode, use Read, Write, Continuous Write, and Step Write to monitor data communication between the ID Sensor and the Data Carrier. In this mode, the ID Sensor Unit operates only via commands input from the Handheld Programming Comsole; commands from the CPU are ignored.	The ID Sensor Unit reads/ writes data directly from/to the Data Carrier.	An easy operation test such as Read, Step Write or Continuous Write can be performed when installing the ID Sensor.
		The ID Sensor Unit repeatedly executes Read, Write, Auto Read, or Auto Write. If an error occurs, the corresponding error code is displayed on the Programming Console. (Refer to *3-2-10 Error Codes.*)	Use this mode to test (TEST) and adjust the speed of the Data Carrier and the distance from the Read/Write Head (or Antenna).
		Any communication error that has occurred in RUN mode is displayed on the Programming Console.	If an error occurs, use MONITOR mode to determine the cause. (Refer to *3-2-9 Error Log Display (ERR).*)
PROGRAM	Not used.		—–

RUN Mode

In this mode, the CPU transfers data to and from the Data Carrier according to the program in the CPU. It is a normal operating mode; data cannot be input.

The following message appears on the Handheld Programming Console display.

```
<RUN>
```

PROGRAM Mode

This mode is not used, as the ID Sensor Unit cannot be programmed. When the mode selector on the Programming Console is set to the PROGRAM position, the following message is displayed.

```
<PROGRAM>
<MODE ERROR>
```

MONITOR Mode

When the selector is set to the MONITOR position, the following message is displayed, indicating that the operation of the ID Sensor Unit can be monitored.

```
<MONITOR>         BZ
```

Note

1. The CPU program is not executed in this mode. MONITOR mode is used specifically for monitoring operation of the ID Sensor Unit.
2. After monitoring the ID Sensor Unit, be sure to set the Handheld Programming Console to RUN to resume normal operation.

MONITOR Mode Functions and Operation

The following table gives a brief explanation of the commands used for monitoring and their functions. Each command is explained in more detail later in this section.

Note that these commands can only be used when the Programming Console is in MONITOR mode.

Monitor command	Function	Key sequence
JOB	Sets a Read/Write Head (or Antenna) word number (fixed to 1) and address page number.	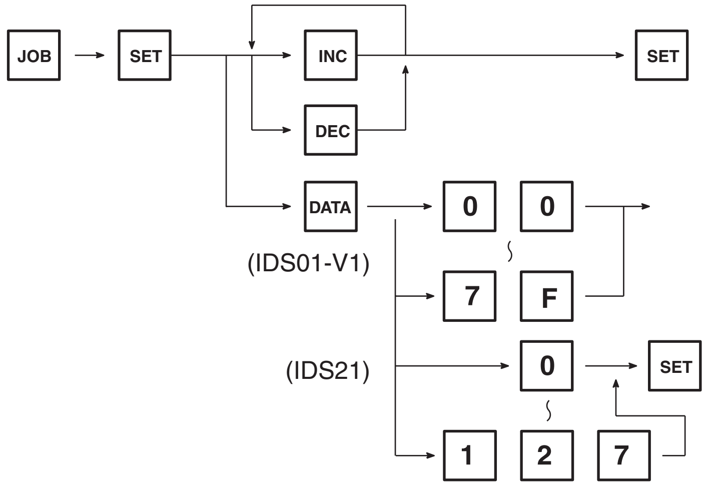 JOB SET INC DEC SET DATA 0 0 (IDS01-V1) 7 F (IDS21) 0 SET 1 2 7

Monitor command	Function	Key sequence
Start address/end address setting	——	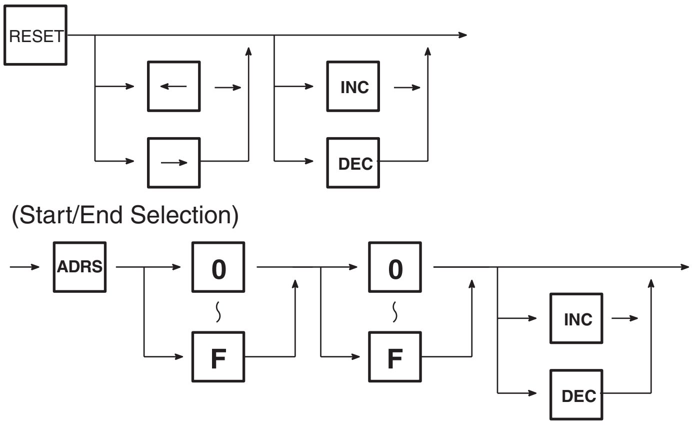 RESET ← → INC DEC (Start/End Selection) ADRS 0 F 0 F INC DEC
DATA setting	——	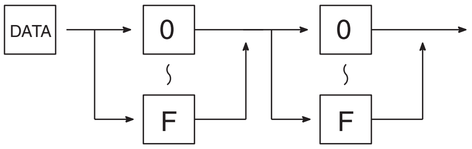
READ	Reads 1 byte of data from a specified address of the Data Carrier.	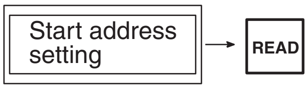 Start address setting READ
Step Write (WRITE 1)	Writes 1 byte of data to a specified address of the Data Carrier.	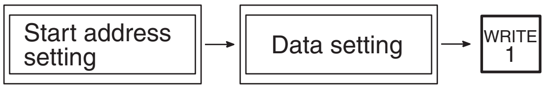 Start address setting Data setting WRITE 1
Continuous Write (WRITE 2)	Writes several bytes of identical data to a specified address range of the Data Carrier.	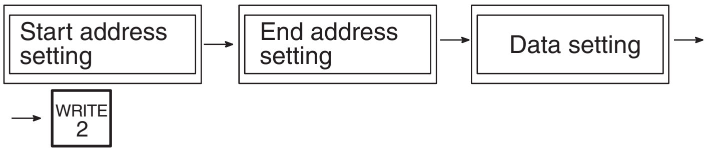 Start address setting End address setting Data setting WRITE 2
Monitor test (TEST)	Use this command to repeatedly execute Read, Write, Auto Read, or Auto Write in a specified address range of the Data Carrier and monitor error messages that occur as a result of command execution. The specified address range is accessed at one-second intervals.	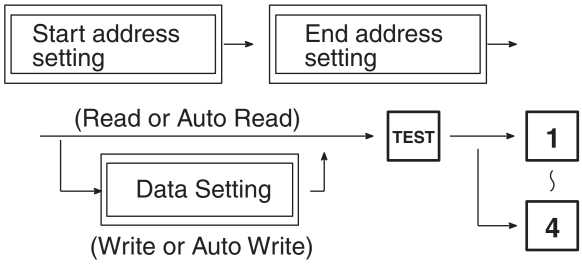 Start address setting End address setting (Read or Auto Read) Data Setting (Write or Auto Write) TEST 1 4

Monitor command	Function	Key sequence
Error log display	Use this command to display errors that occurred while the ID Sensor was in RUN mode. Error messages and corresponding codes are displayed, and errors are classified as either “newest error” or “statistical error”.	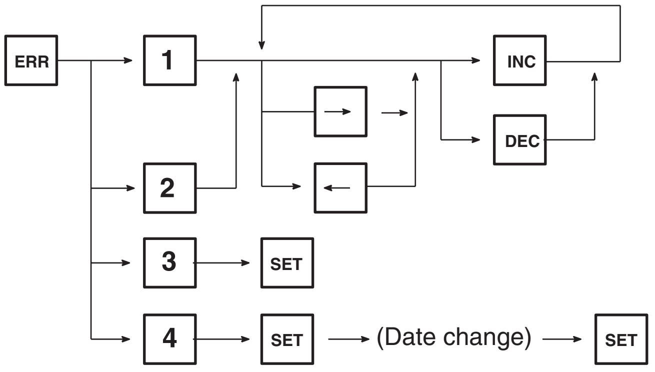 ERR 1 2 3 4 → ← INC DEC SET (Date change) 1 : displays newest error information 2 : displays statistical error information 3 : clears newest error information 4 : clears statistical error information

Initial Display When the mode selector is in the MONITOR mode, the following message is displayed:

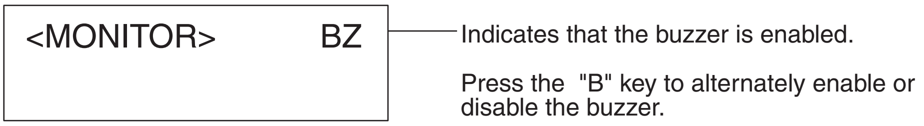

```
<MONITOR>        BZ
```

Indicates that the buzzer is enabled.

Press the "B" key to alternately enable or disable the buzzer.

Note When the Programming Console is in MONITOR mode and the buzzer is enabled, only the following keys are functional:

RESET DATA ADRS JOB B

RESET Display Press the RESET key to return the screen to RESET status. Press the RESET key either after a monitoring operation has been completed, or during a monitoring operation to abort that operation.

The following message is displayed when the RESET key is pressed:

C200H-IDS01-V1

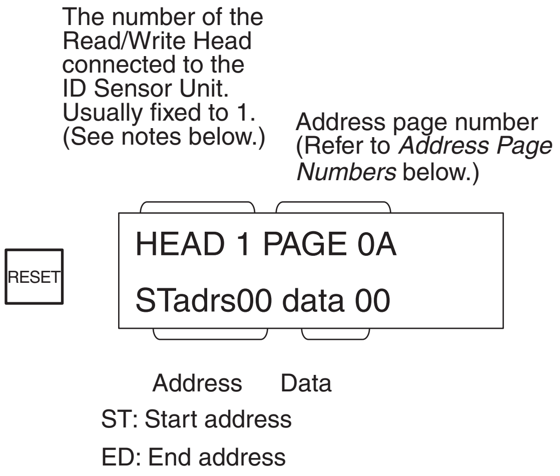

The number of the Read/Write Head connected to the ID Sensor Unit. Usually fixed to 1. (See notes below.)

Address page number (Refer to *Address Page Numbers* below.)

```
HEAD 1 PAGE 0A
STadrs00 data 00
```

ST: Start address

ED: End address

C200H-IDS21

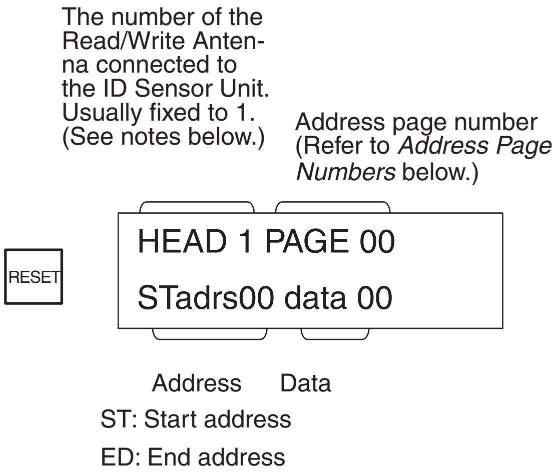

The number of the Read/Write Antenna connected to the ID Sensor Unit. Usually fixed to 1. (See notes below.)

Address page number (Refer to *Address Page Numbers* below.)

```
HEAD 1 PAGE 00
STadrs00 data 00
```

ST: Start address

ED: End address

Note

1. The number “1” need not be changed or reset, unless otherwise instructed or necessary.
2. The C200H-IDS01-V1 indicates “HEAD 1” while the C200H-IDS21 indicates “ANT.1”. Throughout this section, “HEAD 1” is displayed on the screen, but “ANT.1” will be displayed when the C200H-IDS21 is used.
3. The address page number must be set in hexadecimal on the C200H-IDS01-V1 and decimal on the C200H-IDS21.

3-2-3 The JOB Function

Use the JOB operation when the current address page number must be changed.

The JOB operation can also be used to set a Read/Write Head (or Antenna) wordnumber and address page number. However, since the Read/Write Head (or Antenna) word number is already fixed to 1, no word number has to be set.

Address Page Numbers

There are 2K bytes of addresses in the Data Carrier.

	Address Page Number							
Address range	**0**	**1**	**2**	**3**	**4**	**5**	**6**	**7**
	000 through 0FF	100 through 1FF	200 through 2FF	300 through 3FF	400 through 4FF	500 through 5FF	600 through 6FF	700 through 7FF
	8	**9**	**A**	**B**	**C**	**D**	**E**	**F**
	800 through 8FF	900 through 9FF	A00 through AFF	B00 through BFF	C00 through CFF	D00 through DFF	E00 through EFF	F00 through FFF
	10	**11**	**12**	**13**	**14**	**15**	**16**	**17**
	1000 through 10FF	1100 through 11FF	1200 through 12FF	1300 through 13FF	1400 through 14FF	1500 through 15FF	1600 through 16FF	1700 through 17FF

Setting Address Page Numbers

There are two methods for setting address page numbers: with the INC and DEC keys or with the DATA key (refer to the following figures). In the following example, the INC and DEC keys are used.

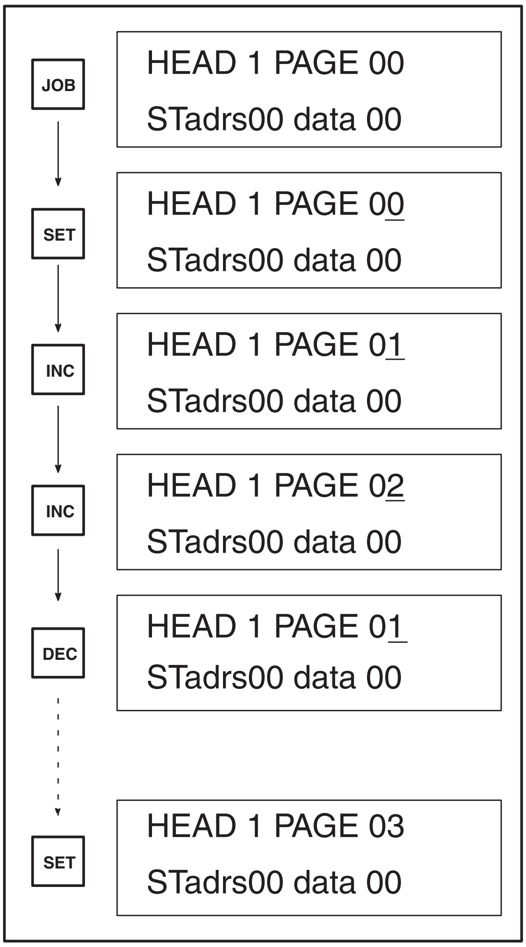
JOB
HEAD 1 PAGE 00
STadrs00 data 00
SET
HEAD 1 PAGE 00
STadrs00 data 00
INC
HEAD 1 PAGE 01
STadrs00 data 00
INC
HEAD 1 PAGE 02
STadrs00 data 00
DEC
HEAD 1 PAGE 01
STadrs00 data 00
SET
HEAD 1 PAGE 03
STadrs00 data 00

Press the JOB key while the initial message or reset message is displayed.

A R/W Head (or Antenna) number can now be set; as the word number is already fixed, press the SET key to continue.

The address page number is increased by one each time the INC key is pressed.

The address page number is decreased by one each time the DEC key is pressed.

After the address page number has been selected, press the SET key.

There are two methods for setting address page numbers: with the INC and DEC keys or with the DATA key. In the following example, the DATA key is used.

C200H-IDS01-V1

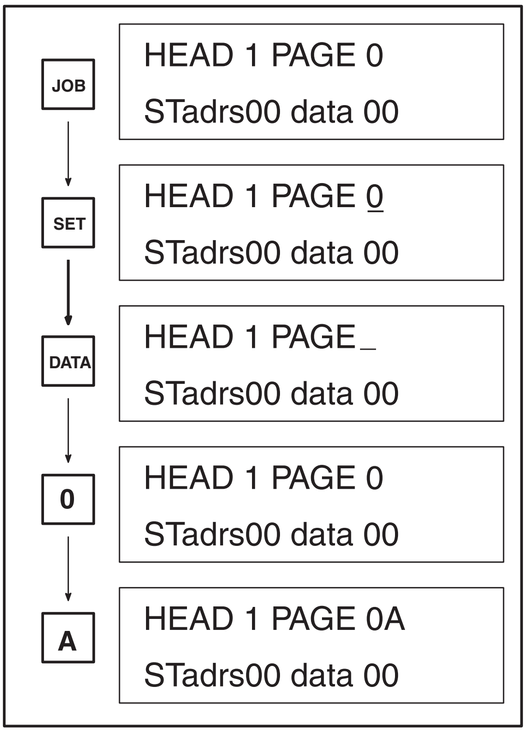
JOB
HEAD 1 PAGE 0
STadrs00 data 00
SET
HEAD 1 PAGE 0
STadrs00 data 00
DATA
HEAD 1 PAGE_
STadrs00 data 00
0
HEAD 1 PAGE 0
STadrs00 data 00
A
HEAD 1 PAGE 0A
STadrs00 data 00

Press the JOB key while the initial message or reset message is displayed.

A R/W Head word number can now be set; as the word number is already fixed, press the SET key to continue.

Press the DATA key; an address page number can now be input.

Set the address page number to the desired value (within the range 0 through F) by pressing the corresponding numeric key. In this example, the address page number is set to 5.

Set the lower digit of the address page number to the desired value (within the range 0 through F) by pressing the corresponding numeric key. In this example, the address page number is set to 0A.

C200H-IDS21

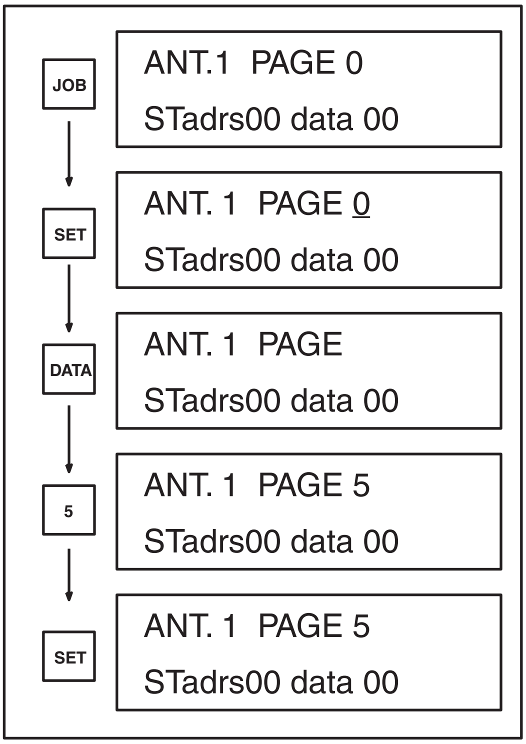
JOB
ANT.1 PAGE 0
STadrs00 data 00
SET
ANT. 1 PAGE 0
STadrs00 data 00
DATA
ANT. 1 PAGE
STadrs00 data 00
5
ANT. 1 PAGE 5
STadrs00 data 00
SET
ANT. 1 PAGE 5
STadrs00 data 00

Press the JOB key while the initial message or reset message is displayed.

A R/W Antenna number can now be set; as the word number is already fixed, press the SET key to continue.

The address page number is decreased by one each time the DEC key is pressed.

Set the address page number to the desired value (within the range 0 through 9).

In this example, the address page number is set to 5.

Press the SET key to complete the procedure.

3-2-4 Address/Data Setting

Before executing the Read (READ), Step Write (WRITE 1), Continuous Write (WRITE 2), or Test (TEST) commands, you must specify the Data Carrier address to be accessed and the data (1 byte) to be written to that address. This section explains the procedure for specifying the data, selecting the addresses, and setting the addresses and data. The data and addresses that must be set before the execution of each command are shown in the following table.

Once the data is set in the specified address range, it will be retained until the data is set again. Therefore, the same address can be accessed as many times as required by pressing the command key.

Command	Address		Data
	Start address	End address	
READ	•	–	–
WRITE 1 (Step Write)	•	–	•
WRITE 2 (Continuous Write)	•	•	•
TEST 1 (Read)	•	•	–
TEST 2 (Write)	•	•	•
TEST 3 (Auto Read)	•	•	–
TEST 4 (Auto Write)	•	•	•

Note
1. Items marked • must be set.
2. Set an end address whose value is equal to or greater than that of the specified start address.

Selecting Start and End Addresses

First, select a start or end address. Refer to the diagram below in selecting either the start address or the end address of a specific page. Once selected, the desired values can be input.

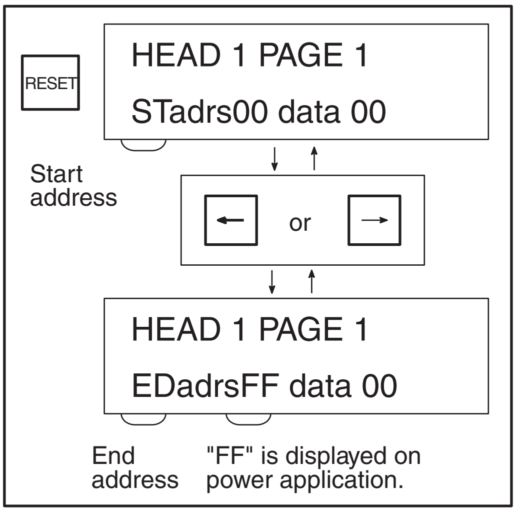

Press the RESET button to display the reset screen, as shown on the left.

Pressing the left or right arrow key alternately displays the current start and end addresses.

Note This operation displays only the current addresses; it cannot be used to change an address.

Setting Addresses

First select either a start address (STadrs) or end address (EDadrs) as described under the previous heading *Selecting Start and End Addresses.* Then enter the desired value for the start address or end address. The values can be input either directly or by using the INC/DEC keys. Refer to the following figures.

Setting Addresses (Direct Input)

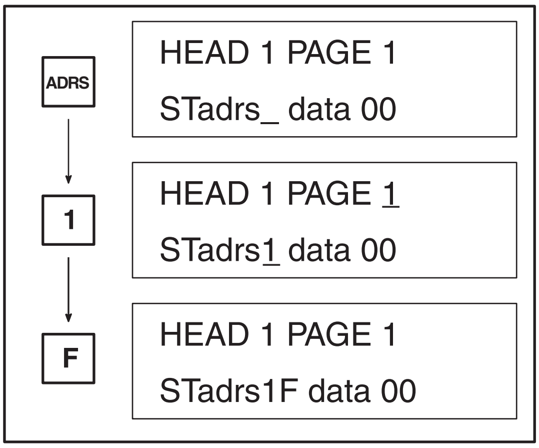
ADRS
HEAD 1 PAGE 1
STadrs_ data 00
1
HEAD 1 PAGE 1
STadrs1 data 00
F
HEAD 1 PAGE 1
STadrs1F data 00

Change the current address (start or end address) by first pressing the ADRS key and then entering the desired value. In this example, the start address is changed to 1F.

Enter the value (from 0 through F) of the leftmost digit of the address. In this example, the higher digit is 1.

Enter the value (from 0 through F) of the rightmost digit of the address. In this example, the lower digit is F.

The address can also be input or changed using the INC or DEC keys, as shown below.

Setting Addresses (INC/DEC keys)

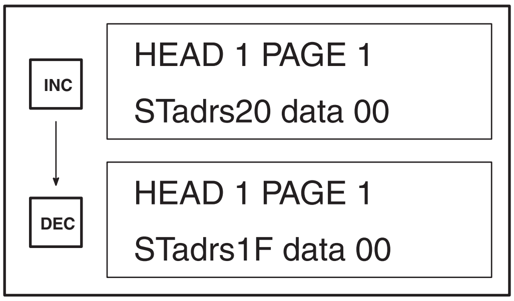
INC
HEAD 1 PAGE 1
STadrs20 data 00
DEC
HEAD 1 PAGE 1
STadrs1F data 00

The address is incremented each time the INC key is pressed. Note that the address is set in hexadecimal.

The address is decremented each time the DEC key is pressed.

When setting the address, be sure that the end address is equal to or greater than the start address. If a value input for the end address is less than that of the start address, the buzzer will sound and the input will not be accepted.

When the last value is input, the entire address is automatically set; it is not necessary to press the SET key.

Data Setting

After the address to be accessed has been set, input and set the data. Refer to the following figure.

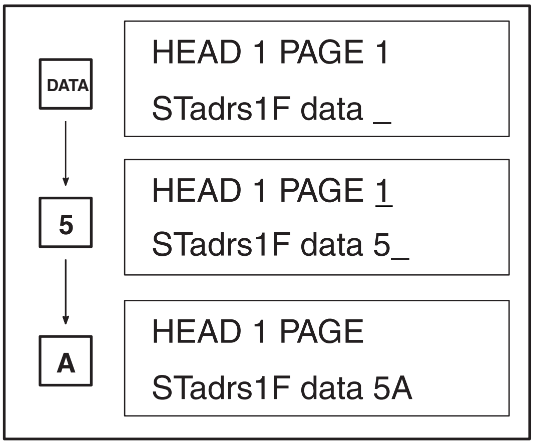
DATA
HEAD 1 PAGE 1
STadrs1F data _
5
HEAD 1 PAGE 1
STadrs1F data 5_
A
HEAD 1 PAGE
STadrs1F data 5A

Press the DATA key to begin entering and setting data.

First, enter the value of the leftmost digit (0 through F). In this example, the higher digit is 5.

Next, enter the value of the rightmost digit (0 through F). In this example, the lower digit is A.

After the lower digit has been entered, the data is automatically set; it is not necessary to press the SET key.

If you have entered the wrong data, or you want to change the data, press the DATA key and repeat the procedure.

If the Read command is subsequently used to read data to the same data area, the set data will be changed to the value read by the Read command.

3-2-5 Read

This operation reads 1 byte of data from a specified address in the Data Carrier. Refer to the following figure.

Before performing this operation, select the address and data you want to read. Refer to *3-2-4 Address/Data Setting* for details.

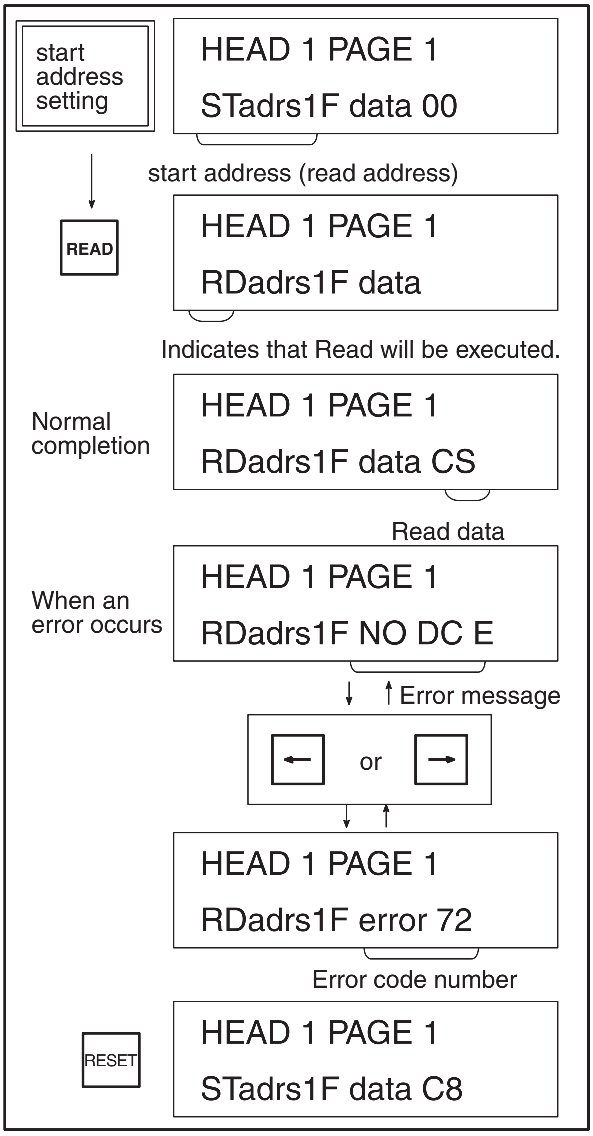
start address setting
start address (read address)
READ
Indicates that Read will be executed.
Normal completion
Read data
When an error occurs
Error message
or
Error code number
RESET

```
HEAD 1 PAGE 1
STadrs1F data 00
```

Set the start address from which the data is to be read.

```
HEAD 1 PAGE 1
RDadrs1F data
```

Press the READ key; the data in the specified start address will be read.

```
HEAD 1 PAGE 1
RDadrs1F data CS
```

When the read operation has been completed, the read data is displayed.

```
HEAD 1 PAGE 1
RDadrs1F NO DC E
```

If an error has occurred during the READ operation, the buzzer will sound for 2 seconds, and an error message will be displayed (refer to *3-2-10 Error Codes*).

Pressing the left or right arrow key will toggle the display between the error message and the corresponding error code.

```
HEAD 1 PAGE 1
RDadrs1F error 72
```

```
HEAD 1 PAGE 1
STadrs1F data C8
```

To perform another operation or to abort the READ operation, press the RESET key. The display will return to the reset display. In this example, the display indicates the reset status. Another operation can now be performed.

3-2-6 Step Write (WRITE 1)

This operation writes 1 byte of specified data to a specified address in the Data Carrier. Refer to the following figure.

Before performing this operation, select the address and the data you want to write. Refer to *3-2-4 Address/Data Setting* for details.

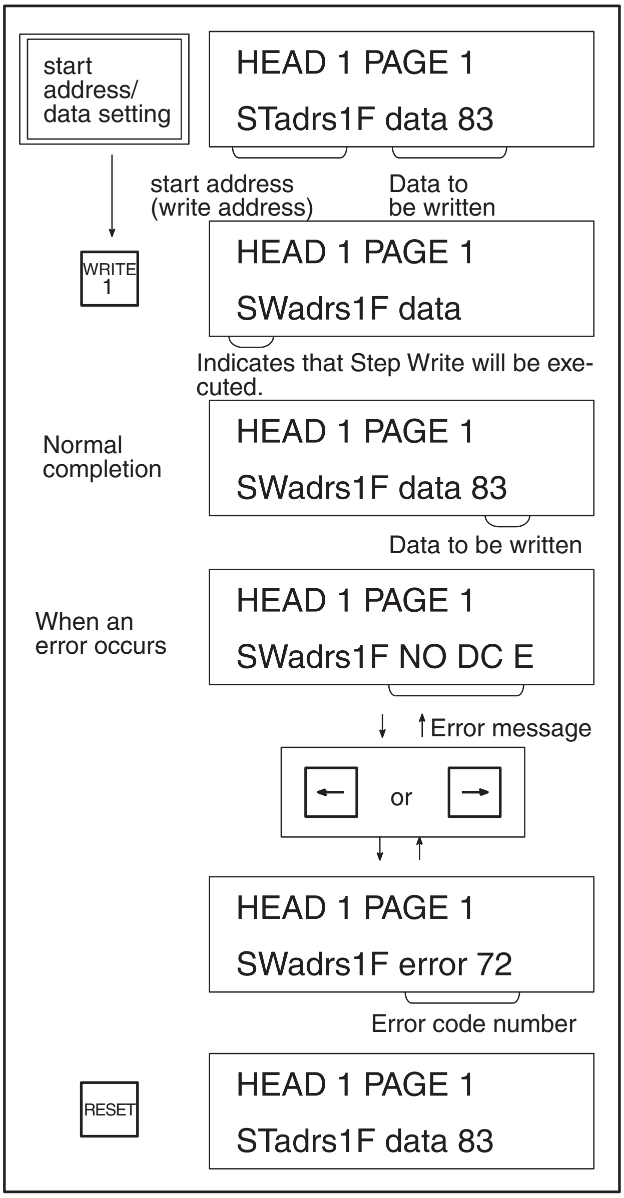
start address/ data setting
HEAD 1 PAGE 1
STadrs1F data 83
start address (write address)
Data to be written
WRITE 1
HEAD 1 PAGE 1
SWadrs1F data
Indicates that Step Write will be executed.
Normal completion
HEAD 1 PAGE 1
SWadrs1F data 83
Data to be written
When an error occurs
HEAD 1 PAGE 1
SWadrs1F NO DC E
Error message
or
HEAD 1 PAGE 1
SWadrs1F error 72
Error code number
RESET
HEAD 1 PAGE 1
STadrs1F data 83

Set the data to be written and the address in the Data Carrier the data is to be written to.

Press the WRITE 1 key to write the data to the start address and begin the Step Write operation.

If the data is written correctly, it is displayed as shown in the example.

If an error occurs during the operation, the buzzer sounds for 2 seconds, and an error message is displayed (refer to *3-2-10 Error Codes*).

Pressing the left or right arrow key will toggle the display between the error message and the corresponding error code.

To perform another operation, or to abort the Step Write operation, press the RESET key. The display will return to the reset status. In this example, the display indicates the reset status Another operation can now be performed.

3-2-7 Continuous Write (WRITE 2)

This operation continuously writes several bytes of the same data to a specified address range in the Data Carrier. Refer to the following figure.

Before performing this operation, select the address and the data you want to write. Refer to *3-2-4 Address/Data Setting* for details.

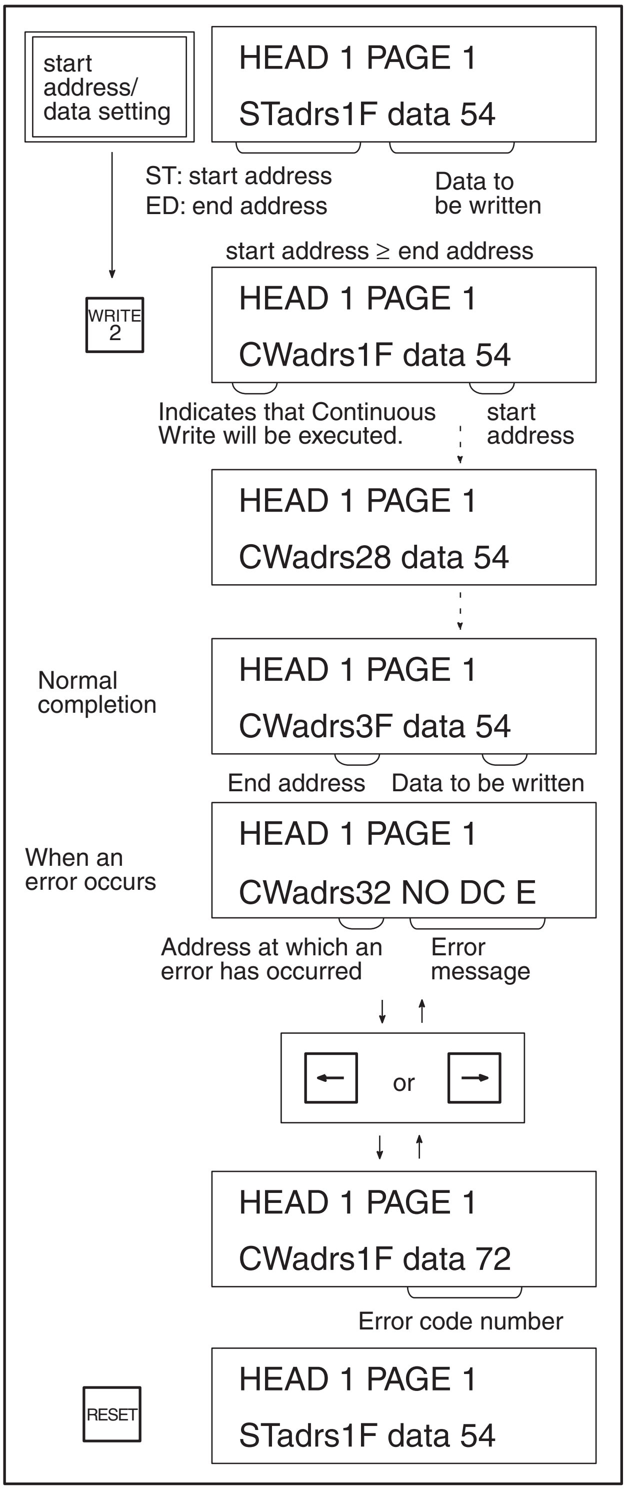
start address/ data setting
HEAD 1 PAGE 1
STadrs1F data 54
ST: start address
ED: end address
Data to be written
start address ≥ end address
WRITE 2
HEAD 1 PAGE 1
CWadrs1F data 54
Indicates that Continuous Write will be executed.
start address
HEAD 1 PAGE 1
CWadrs28 data 54
Normal completion
HEAD 1 PAGE 1
CWadrs3F data 54
End address
Data to be written
When an error occurs
HEAD 1 PAGE 1
CWadrs32 NO DC E
Address at which an error has occurred
Error message
← or →
HEAD 1 PAGE 1
CWadrs1F data 72
Error code number
RESET
HEAD 1 PAGE 1
STadrs1F data 54

Select the start and end addresses, as well as the data to be written.

Press the WRITE 2 key. "CW" is displayed in the lower left corner of the Programming Console display, indicating that Continuous Write is being executed. The data is written to the addresses in the range specified.

When the data is written correctly to all addresses and the Continuous Write operation is completed, the written data appears as shown in the example.

If an error occurs during the Continuous Write operation, the buzzer sounds for 2 seconds, and an error message is displayed (refer to *3-2-10 Error Codes*).

Pressing the left or right arrow key will toggle the display between the error message and the corresponding error code.

To perform another operation or abort the Continuous Write operation, press the RESET key, and the display will return to reset status. In this example, the display indicates the reset status. Another operation can now be performed.

3-2-8 Monitor Test (TEST)

This operation repeatedly executes (at 1-second intervals) either the Read, Write, Auto Read, or Auto Write command in specified addresses of the Data Carrier. Any command errors that occur are displayed. Use this operation to test and adjust the distance of the Data Carrier from the Read/Write Head (or Antenna), and the travel speed of the Data Carrier. Refer to the following figure.

Before performing this operation, select the address and the data you want to read or write. Refer to *3-2-4 Address/Data Setting* for details.

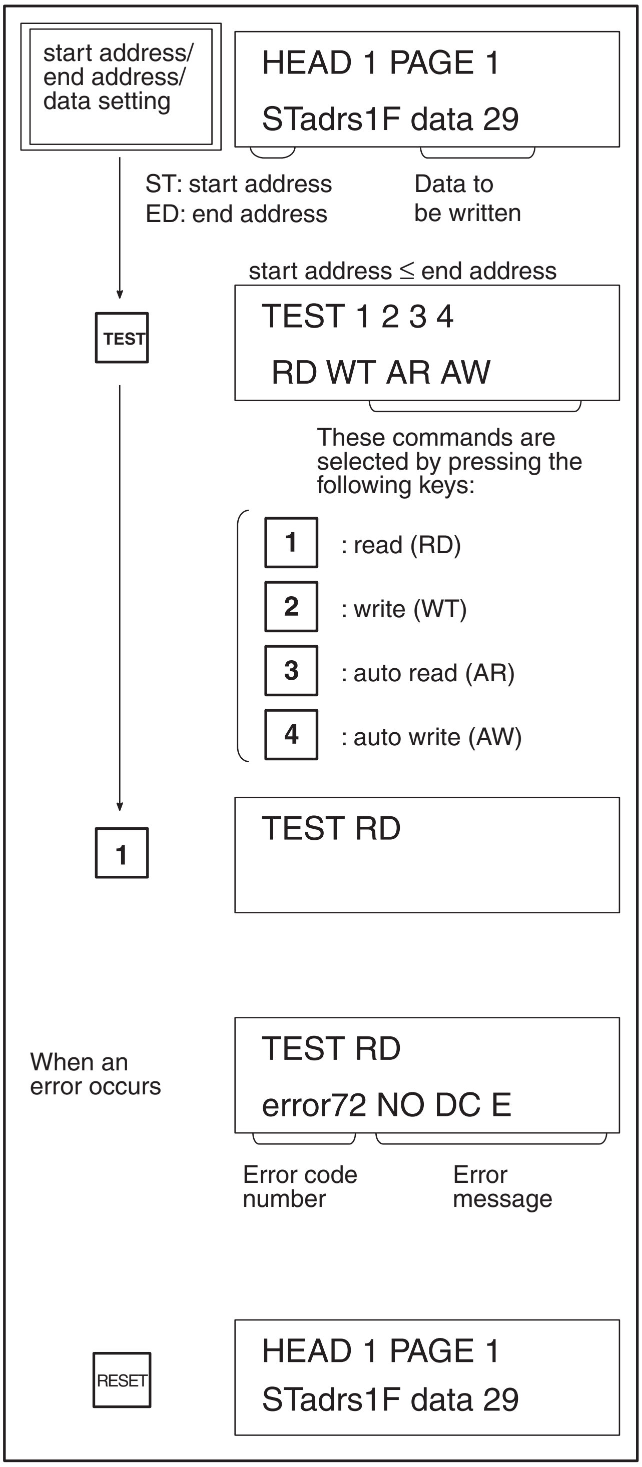

start address/ end address/ data setting
HEAD 1 PAGE 1
STadrs1F data 29
ST: start address
ED: end address
Data to be written
start address ≤ end address
TEST
TEST 1 2 3 4
RD WT AR AW
These commands are selected by pressing the following keys:
1 : read (RD)
2 : write (WT)
3 : auto read (AR)
4 : auto write (AW)
1
TEST RD
When an error occurs
TEST RD
error72 NO DC E
Error code number
Error message
RESET
HEAD 1 PAGE 1
STadrs1F data 29

First, select the address to be accessed and the data to be written or read. When executing Write or Auto Write, remember to set the data to be written as well as the address.

Press the TEST key. Execute a command from the command menu (displayed on the screen) by pressing the number that corresponds to the command you want to execute.

In this example, the READ command is selected.

From the start address to the end address of the Data Carrier, the READ command is executed on a step-by-step basis. In one-second intervals, data is read and checked for errors. If an error occurs while a command is being executed, the corresponding error number and message are displayed. (Refer to *3-2-10 Error Codes*). The error message and code disappear automatically if the next command is executed correctly.

While the TEST operation is being performed, the T/R LED indicator on the ID Sensor Unit blinks.

To begin another command or to abort the TEST operation, press the RESET key and the display will return to the reset status.

3-2-9 Error Log Display (ERR)

This operation displays errors that have occurred while the ID Sensor Unit was in the RUN mode and the user program was being executed. The errors are displayed in two formats: newest error information and statistical error information.

“Newest error” is a list of the 30 most recent errors; “statistical error” displays the number of times an error has occurred since a predetermined starting date. The MCBF (Mean Cycle Between Failures: total number of commands/ total number of errors) is also displayed. To change the date from which errors are to be monitored (registration date), execute the statistical error clearing operation (key 4) as shown in the following figure.

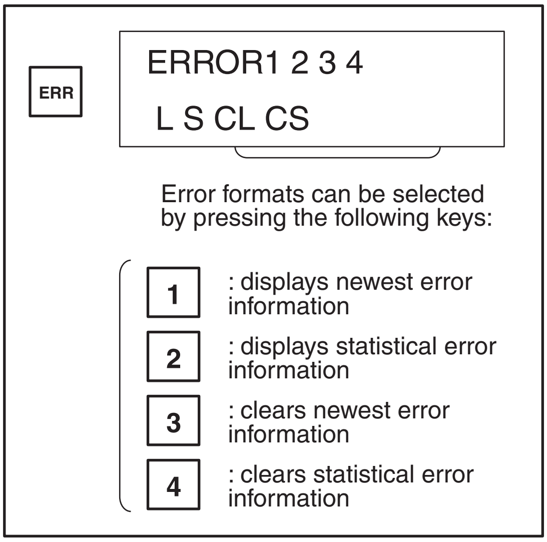

```
ERROR1 2 3 4
 L S CL CS
```

Error formats can be selected by pressing the following keys:

- 1 : displays newest error information
- 2 : displays statistical error information
- 3 : clears newest error information
- 4 : clears statistical error information

Press the ERR key to display the newest error information or statistical error information.

Use keys 1 through 4 to display or clear desired error information.

The error information storage area of the ID Sensor Unit is undefined upon delivery. Before using the ID Sensor Unit, press key 3 to clear newest error information, and key 4 to clear statistical error information.

Error information is backed up by a capacitor for up to 15 days (at 25°C). If the ID Sensor Unit is left OFF for more than 15 days, the error information becomes undefined and the error information must be cleared again.

Clearing Newest Error Information (Key 3)

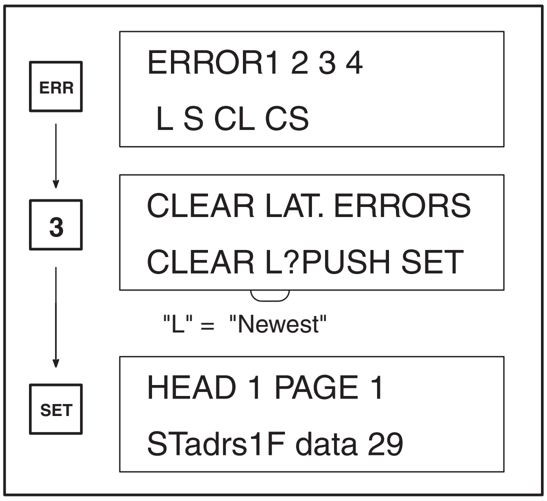

```
ERROR1 2 3 4
 L S CL CS
```

When the ERR key is pressed, the menu shown at left is displayed. Press key 3 to choose the newest error clearing operation.

```
CLEAR LAT. ERRORS
CLEAR L?PUSH SET
```

"L" = "Newest"

The message "CLEAR L?" is displayed, asking for confirmation that the information is to be cleared. Press RESET to preserve the error information. Press SET to clear the information.

```
HEAD 1 PAGE 1
STadrs1F data 29
```

When the information has been cleared, the display returns to the RESET status.

Clearing Statistical Error Information (Key 4)

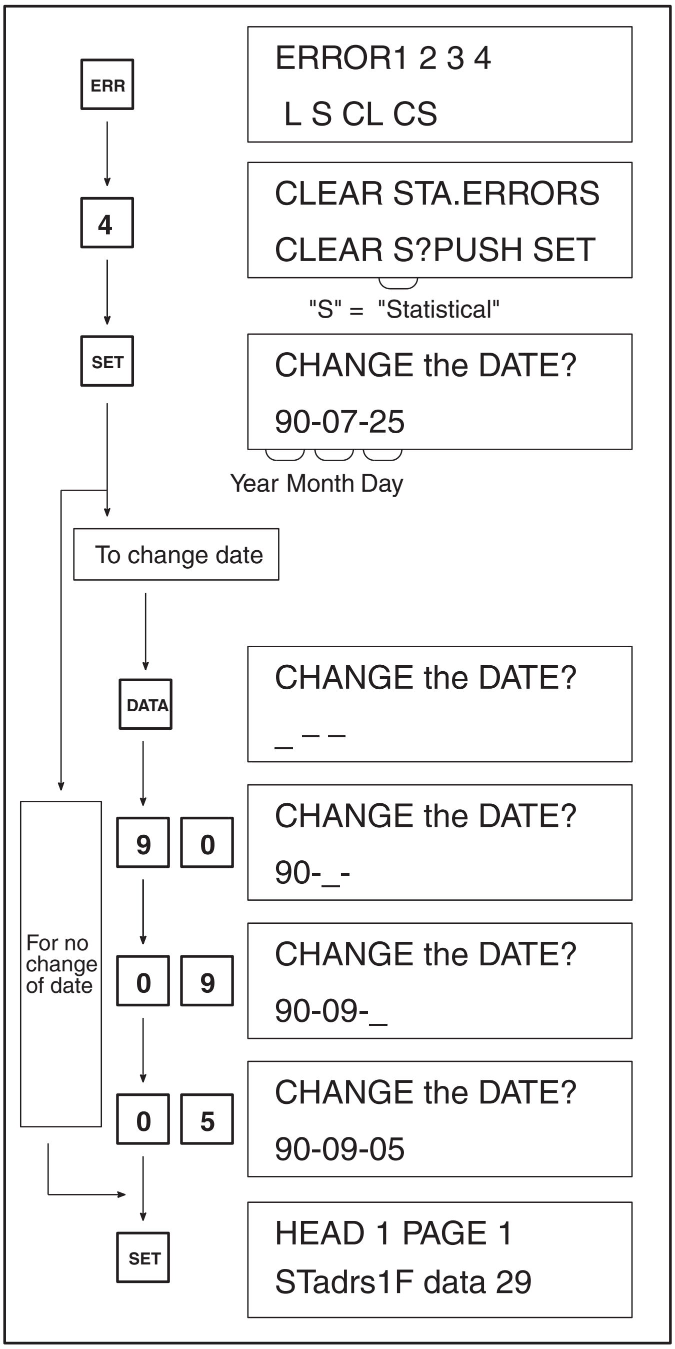

```
ERROR1 2 3 4
 L S CL CS

CLEAR STA.ERRORS
CLEAR S?PUSH SET

CHANGE the DATE?
90-07-25

CHANGE the DATE?
_ _ _

CHANGE the DATE?
90-_-

CHANGE the DATE?
90-09-_

CHANGE the DATE?
90-09-05

HEAD 1 PAGE 1
STadrs1F data 29
```

Press key 4 to clear the statistical error information and set a new registration date.

The message "CLEAR S?" is displayed, asking for confirmation that the statistical error information is to be cleared.

Press the RESET key to retain the information. Press the SET key to clear the information and set a new date from which statistical error information is to be collected. When the error information has been cleared, the previous registration date is displayed, followed by the message, "CHANGE the DATE?"

Press the DATA key to begin entering the date.

Enter the last 2 digits of the year. In this example, the year is set to 1990.

Next, enter the month as a 2-digit number (01 for January; 09 for September). In this example, the month is set to September.

Now input the day as a 2-digit number. Be sure to input the prefix 0 when entering a single-digit day (i.e. 01, 02). In this example, the day is set to the 5th.

Press the SET key to set the date. The display will return to the reset status.

If the month is set to 00 or greater than 12, or if the day is set to 00 or greater than 31, all the previously set values will be cleared and the date must be re-entered.

Newest Error Information (Key 1)

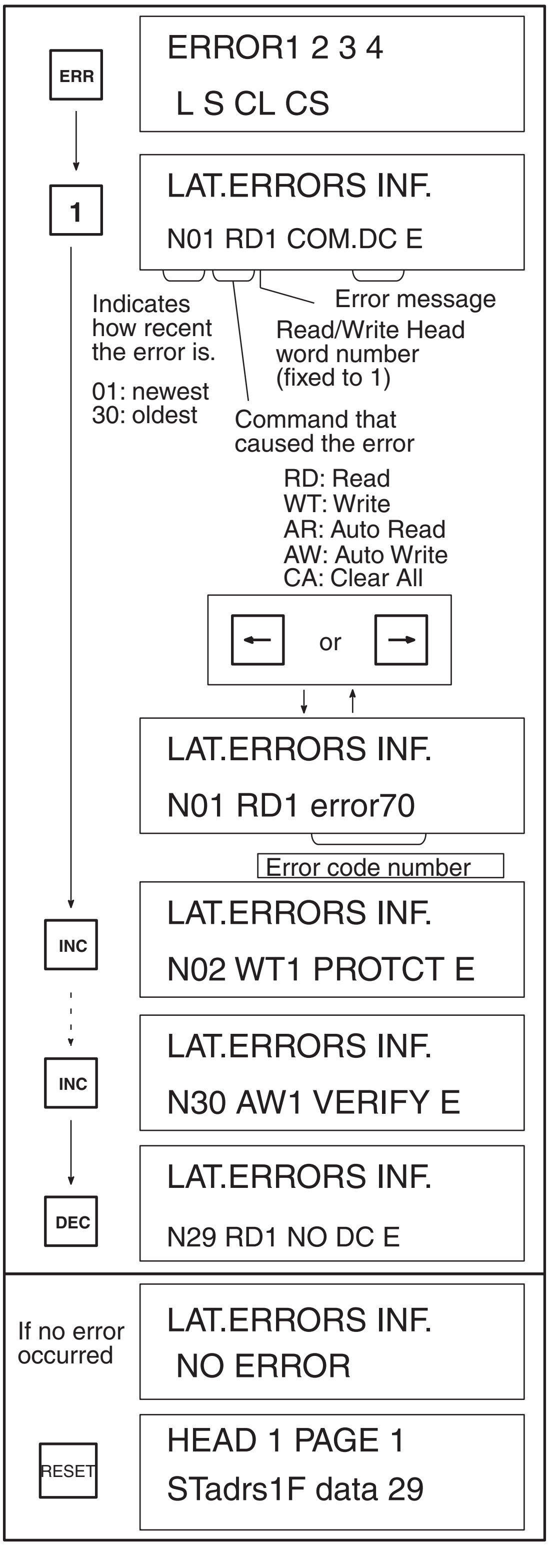
ERR
ERROR1 2 3 4
L S CL CS
1
LAT.ERRORS INF.
N01 RD1 COM.DC E
Indicates how recent the error is.
01: newest
30: oldest
Error message
Read/Write Head word number (fixed to 1)
Command that caused the error
RD: Read
WT: Write
AR: Auto Read
AW: Auto Write
CA: Clear All
← or →
LAT.ERRORS INF.
N01 RD1 error70
Error code number
INC
LAT.ERRORS INF.
N02 WT1 PROTCT E
INC
LAT.ERRORS INF.
N30 AW1 VERIFY E
DEC
LAT.ERRORS INF.
N29 RD1 NO DC E
If no error occurred
LAT.ERRORS INF.
NO ERROR
RESET
HEAD 1 PAGE 1
STadrs1F data 29

Press key 1 to display the command that caused the error and the corresponding error message.

Up to 30 errors can be displayed sequentially by using the INC key.

Press either the left or right arrow key to alternately display the error code number and error message.

Each time the INC key is pressed, the previous error is displayed.

If an error code is being displayed, press INC to display the error message associated with that code.

Each time the DEC key is pressed, new errors are displayed in the order in which they occurred.

If no errors have occurred, "NO ERROR" is displayed.

To start another operation or abort the operation, press the RESET key and the display will return to reset status.

Statistical Error Information (Key 2)

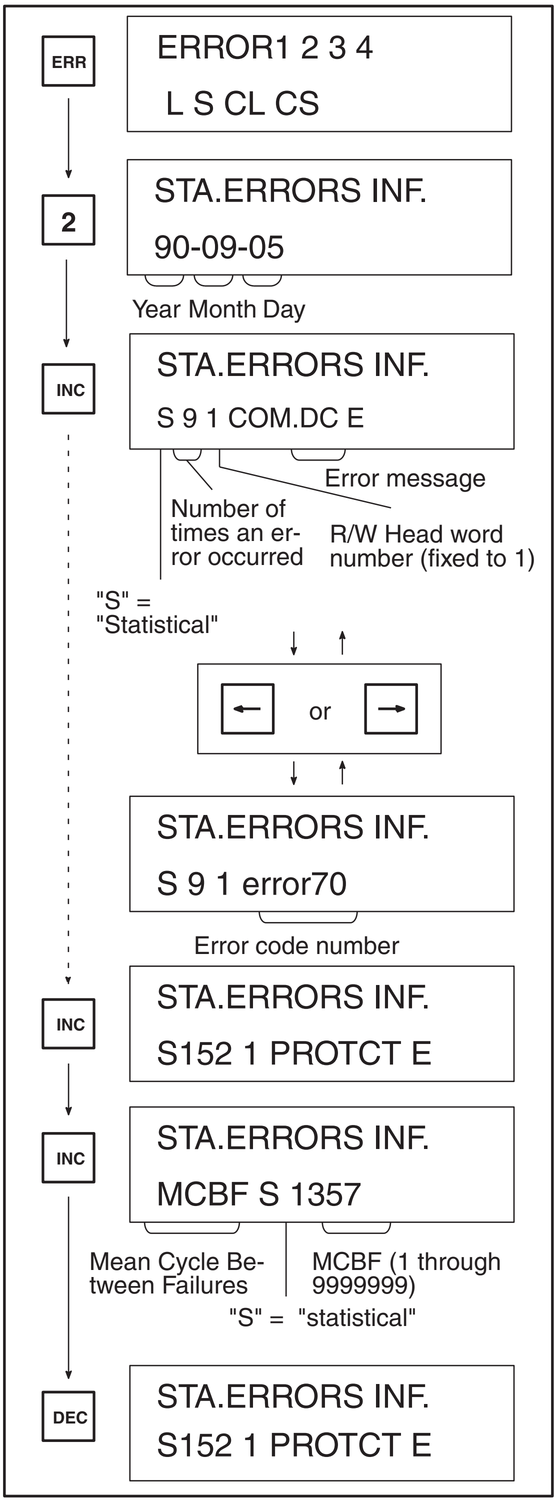
ERR
ERROR1 2 3 4
L S CL CS
2
STA.ERRORS INF.
90-09-05
Year Month Day
INC
STA.ERRORS INF.
S 9 1 COM.DC E
Error message
Number of times an error occurred
R/W Head word number (fixed to 1)
"S" = "Statistical"
←
or
→
STA.ERRORS INF.
S 9 1 error70
Error code number
INC
STA.ERRORS INF.
S152 1 PROTCT E
INC
STA.ERRORS INF.
MCBF S 1357
Mean Cycle Between Failures
MCBF (1 through 9999999)
"S" = "statistical"
DEC
STA.ERRORS INF.
S152 1 PROTCT E

Press key 2 to display the statistical error information.

The date is displayed first. This date was previously registered by the user as the date from which errors were to be monitored.

Press the INC key to display the number of times an error has occurred, the error message, and the R/W Head word number.

Up to 999 errors can be displayed. If 1000 errors have occurred, the 1000th error is displayed as 999.

Press the left or right arrow key to alternately display the error code number and error message.

If an error code is being displayed, as in the example shown at left, press the INC key again to display the error message for the same error. Press the INC key once more to display the next error code and message.

After all messages have been displayed, press the INC key to display the MCBF. The MCBF value is calculated using the following expression:

$$\text{MCBF value} = \frac{\text{Total number of commands}}{\text{Total number of errors}}$$

(The MCBF is rounded off.)

If the MCBF value is 9999999 or more, "9999999" will be displayed.

Press the DEC key to display the previous screen.

(Continued on next page.)

If an error did not occur	STA.ERRORS INF. NO ERROR	If no errors have occurred, this message will be displayed.
RESET	HEAD 1 PAGE 1 STadrs1F data 29	To start another operation or abort the Error Log operation, press the RESET key and the display will return to reset status.

3-2-10 Error Codes

Error code number	Error name	Error message
70	Data carrier communicatin error	COM.DC E
71	Data verification error	VERIFY E
72	No Data Carrier error	NO DC E
7A	Data Carrier address error	ADRS E
7C	Read/Write Head (or Antenna) disconnect error	R/W H E
7D	Wrire protect error	PROTCT E

3-3 Timing Considerations

This section covers command processing time, which is the time required for data communication between the Data Carrier and ID Sensor Unit; and turnaround time, which is the time required by the PC to retrieve a command and complete the reading/writing of data from/to the Data Carrier.

Use the following table and graph to calculate the amount of time required for executing commands involving data communication between the ID Sensor Unit and Data Carrier.

3-3-1 Command Processing Time

Command Processing Time is the time required for data communication between the CPU, ID Sensor, and Data Carrier.

The following graphs show the relationship between the quantity of data to be processed and the time required for processing a command.

C200H-IDS01-V1

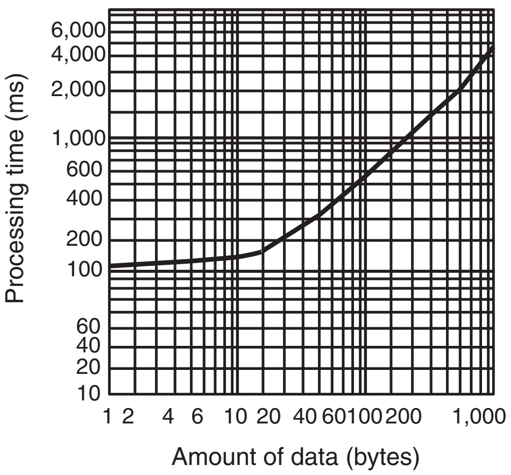

C200H-IDS21

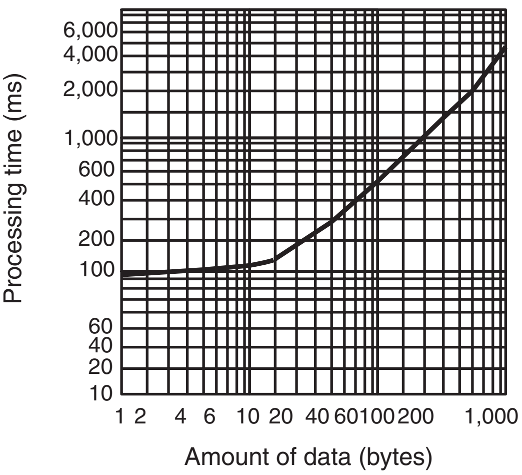

Refer to the following tables for the processing time of each command used for communications between the ID Sensor Unit and Data Carrier.

C200H-IDS01-V1

Data Carrier	IDS mode	Command	Byte											
			1	4	8	16	32	64	128	256	512	1K	2K	8K
V600-D□□R□□ (battery builtin type)	---	Read	54	59	66	82	111	172	293	536	1000	1986	---	---
		Write (clear all)	96	109	127	162	232	374	709	1220	2349	4607	9123	36128
V600-D□□P□□ (with no battery)	Communications distance priority mode	Read	72	86	104	141	213	357	646	1224	---	---	---	---
		Write	185	212	249	322	468	760	1345	2515	---	---	---	---
	Communications speed priority mode	Read	85	91	99	113	144	205	326	567	---	---	---	---
		Write	197	219	250	309	428	667	1145	2098	---	---	---	---

Note

1. The IDS mode is set with pin 2 of the DIP switch.
2. The time required for command processing of the Data Carrier with a built-in battery is not influenced by the IDS mode.
3. 3.2k and 8k bytes only allow the execution of the clear all command.

C200HIDS21

Command	Byte										
	1	4	8	16	32	64	128	256	512	1K	2K
Read/Write command (including auto command)	90	95	105	120	200	355	665	1285	2530	5015	---
Clear all command	---	---	---	---	---	---	---	---	---	---	9875

Data Carrier Moving Speed

Use the following formula to obtain the moving speed of the Data Carrier.

$$\text{Moving speed} = \frac{\text{Moving distance in the communications zone}}{\text{Command processing time}}$$

Refer to the above tables for the processing time of each command. The Data Carrier's moving distance in the communications zone varies with the combination of the R/W Head and Data Carrier. Refer to the appropriate *R/W Head and Data Carrier Operation Manual*.

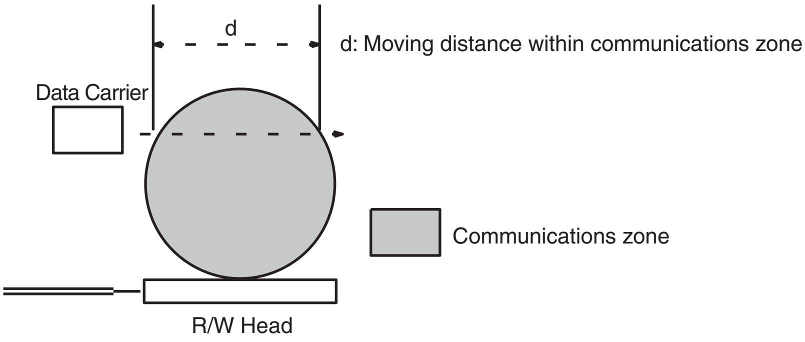

3-3-2 Turnaround Time

Turnaround time (TAT) is the elapsed time from the retrieval of a command by the PC until the data has been read from or written to the Data Carrier. Turnaround time can be calculated as follows:

TAT = Coefficient x PC scan time + Command processing time (+ Remote I/O communication time, if applicable)

Coefficient: Differs according to the number of bytes to be read/written and the I/O refresh time.

PC scan time: The time required by the CPU to scan the program, refresh the I/O area, etc. Determine this value by referring to *Coefficient Values* below.

Command processing time: The time required to process the communication between the ID Sensor Unit and the Data Carrier. Determine this value by referring to *Section 3-3-1 Command Processing Time*.

Remote I/O communication time: additional time required when the ID Sensor Unit is mounted to a Remote I/O Slave Rack. If the ID Sensor Unit is not mounted to a Remote I/O Slave Rack, this time is zero.

Coefficient Values (per execution of a single command)

1,2,3...

1. Write (Auto Write) command
   Coefficient (min) = [(number of bytes of data to be transferred + 8) / 40] + 3
   (Round up to next whole number.)
   Coefficient (max) = Coefficient (min) + 2
2. Read (Auto Read) command
   Coefficient (min) = (number of bytes of data to be transferred / 40) + 5
   (Round up to next whole number.)
   Coefficient (max) = Coefficient (min) + 2
3. Clear-all command
   Coefficient (min) = 4
   Coefficient (max) = 6

SECTION 4
Troubleshooting

This section contains information on maintenance and troubleshooting.

4-1 Periodic Maintenance 74
4-2 What To Do If a Malfunction Occurs 74
4-3 Diagnostic Flowcharts. 75

Section Overview

This section contains information that can help you to determine the cause(s) of any problems you may encounter in the operation of your ID Sensor system. Refer to this section any time you experience a malfunction.

Also included is a checklist of preventive maintenance measures, which you should follow on a monthly basis to ensure long service from your ID Sensor system.

4-1 Periodic Maintenance

Go over the following checklist monthly to ensure troublefree operation of the ID Sensor system.

Condition	Checklist Item	Standard
Environmental	Is the ambient temperature (panel temperature) appropriate?	0° to 55°C
	Is the humidity appropriate?	35 to 85%, without condensation
	Is there dust on the surace of the Unit?	Dust-free
Mounting	Is the ID Sensor Unit securely mounted?	No looseness
	Is the cable securely connected?	The cable connector must not be loose
	Are there cracks or noticeable weak areas in the cable?	Appearance must be normal, free of cracks or exposed wires

4-2 What To Do If a Malfunction Occurs

The following table shows causes and corrective actions for particular malfunctions. Refer to this table if you experience trouble with the ID Sensor system.

Error	Cause	Corrective Action
All indicators remain unlit.	Power is not applied to the PC.	Apply power to the PC. If the indicators coninue to remain unlit, make sure the PC is properly connected to the power supply.
	The ID Sensor Unit is not mounted securely.	Completely remove the ID Sensor Unit from the PC (see note) and remount it, making sure the connecting terminals are secure.
	A WDT (watchdog timer) error has occurred in the ID Sensor Unit.	Turn OFF/ON/OFF the Special I/O Unit restart flag (within the range AR 0100 through 0109) that corresponds to the unit number in the PC.
	CPU ERROR indicator is lit.	Locate the cause of the error in the PC and correct it.

Note Before removing the ID Sensor Unit from the PC, turn OFF the power to the PC.

Replacing the Unit

Before replacing the ID Sensor Unit, be sure to turn OFF the power to the PC. Remove the Unit and replace it with a new Unit, making sure it is securely mounted. Check the new Unit thoroughly before operation.

When returning a defective Unit to OMRON, include a detailed explanation of the problem.

Spare Parts

To minimize downtime of the system, it is advisable to keep at least one spare Unit on hand.

4-3 Diagnostic Flowcharts

If an error occurs, determine the conditions under which it occurs: intermittent or continuing; on-line or off-line.

Use the following flowcharts to determine the cause of an error.

Basic Assurance Test (BAT)

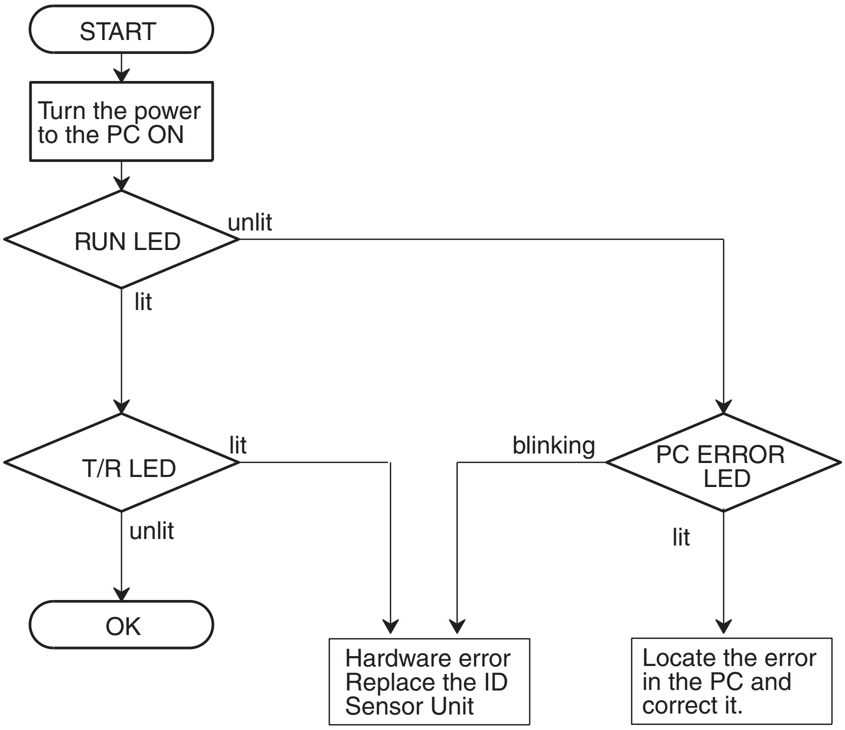
START
Turn the power to the PC ON
RUN LED
unlit
lit
T/R LED
lit
unlit
OK
blinking
PC ERROR LED
lit
Hardware error Replace the ID Sensor Unit
Locate the error in the PC and correct it.

Flowchart for Testing with the Programming Console

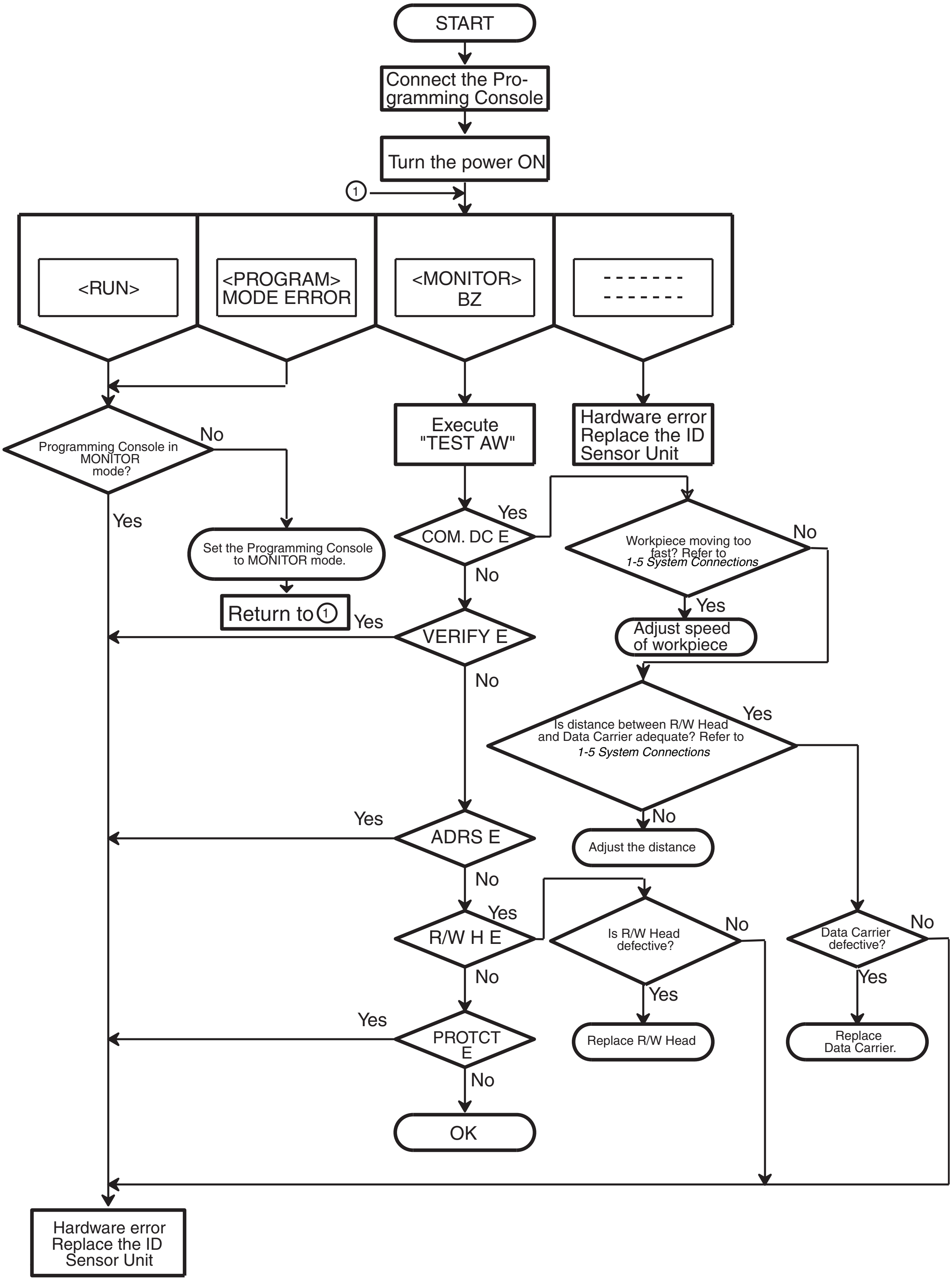
START
Connect the Programming Console
Turn the power ON
①
<RUN>
<PROGRAM> MODE ERROR
<MONITOR> BZ
- - - - - - -
- - - - - - -
Programming Console in MONITOR mode?
No
Yes
Set the Programming Console to MONITOR mode.
Return to ①
Execute "TEST AW"
COM. DC E
Yes
No
VERIFY E
Yes
No
ADRS E
Yes
No
R/W H E
Yes
No
PROTCT E
Yes
No
OK
Hardware error Replace the ID Sensor Unit
Workpiece moving too fast? Refer to 1-5 System Connections
No
Yes
Adjust speed of workpiece
Is distance between R/W Head and Data Carrier adequate? Refer to 1-5 System Connections
Yes
No
Adjust the distance
Is R/W Head defective?
No
Yes
Replace R/W Head
Data Carrier defective?
No
Yes
Replace Data Carrier.
Hardware error Replace the ID Sensor Unit

Appendix A

Specifications

ID Sensor Unit C200H-IDS01-V1/IDS21

Unit Dimensions

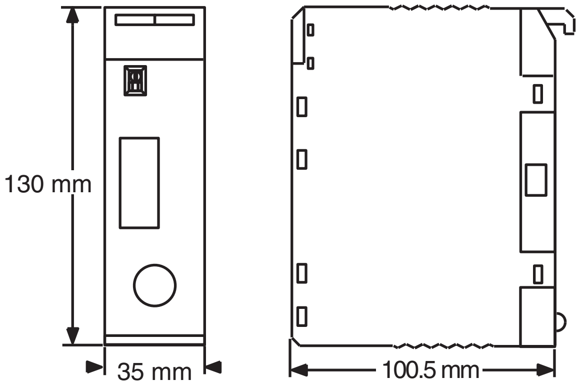
130 mm
35 mm
100.5 mm

Mounted Dimensions

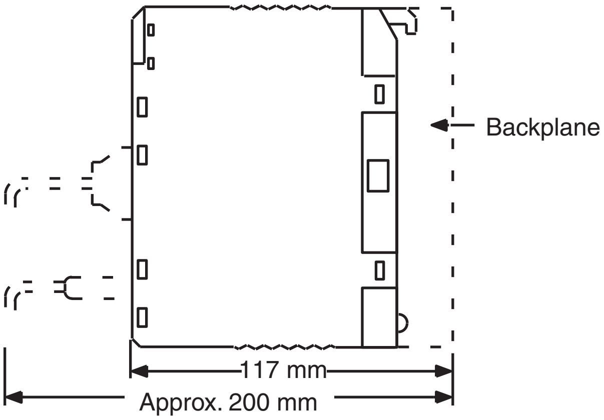
Backplane
117 mm
Approx. 200 mm

Note Verify the depth of the control panel before mounting the ID Sensor Unit.

Characteristics

Item	Specifications
Communication Control Procedure	Interactive
Number of R/W Heads (Antennas) connected	One per ID Sensor Unit.
Data Carrier (DC)	C200H-IDS01-V1: V600series Data Carrier C200H-IDS21: V620series Data Carrier
Commands	The following seven commands are used: Read, Write, Auto Read, Auto Write, Clear-all, Auto Read/Write Abort, and Data Management (C200H-IDS01-V1 only)
Data transferrable per instruction	Up to 512 words (1024 bytes) can be transferred at 20 words/scan.
Diagnostic functions	• CPU watchdog timer • Communication errors Six communication errors identify the causes of errors that have occurred during communication between the Data Carrier and the ID Sensor Unit. (i.e. Data Carrier missing, communication error) • Error Log The Error Log function allows communication errors to be displayed in statistical form or in order of occurrence. Error information is retained by the back-up capacitor.
Monitoring functions	The following monitoring functions are available when the ID Sensor Unit is connected to a Hand-held Programming Console. (Use the keyboard sheet provided with the ID Sensor Unit.) (Cable length: 4 m max.) Read (1 byte) Stepwise Write (1 byte) Continuous Write Test Error Log
Memory backup	Error information is backed up by a capacitor for 15 days (at 25°C). See note 2.
Number of words required	5 words between words 100 through 199 (reserved for Special I/O Units) in the IR area
Internal current consumptions	250 mA max. at 5 VDC. 120 mA max. at 26 VDC (to drive Read/Write Head or R/W Antenna; See note 1.)
Dimensions	35(W)x130(H)x100.5(D) mm
Weight	400 grams max.

Note 1. The Read/Write Head (or Antenna) is supplied 26 VDC. Refer to the *C200H PC Installation Guides (W111 and W218)* for information on system design.

2. The error information stored in the memory of the ID Sensor Unit is retained by a built-in backup capacitor for 15 days at an ambient temperature of 25°C. As shown in the following diagram, the duration of the backup shortens as the temperature rises.

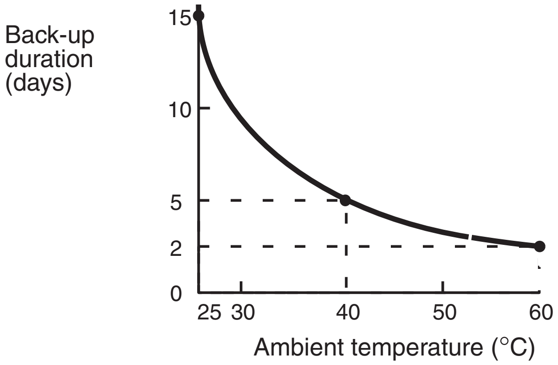

Appendix B

Standard Models

Name	Model Number
Electromagnetic Induction ID Sensor Unit	C200H-IDS01-V1
Microwave Induction ID Sensor Unit	C200H-IDS21
Hand-held Programming Console	C200H-PRO27-E
Connecting Cable (2 m) (See note.)	C200H-CN222
Connecting Cable 42 m) (See note.)	C200H-CN422

Note The cable connects the Handheld Programming Console to the ID Sensor Unit.

Appendix C

ASCII Code List

ASCII Code List

		Higher digit (higher 4 bits)													
		0、1、8、9、	2	3	4	5	6	7	A	B	C	D	E	F
Lower digit (lower 4 bits)	0			0	@	P	`	p		ー	タ	ミ	α	p
	1		!	1	A	Q	a	q	。	ア	チ	ム	ä	q
	2		"	2	B	R	b	r	「	イ	ツ	メ	β	θ
	3		#	3	C	S	c	s	」	ウ	テ	モ	ε	∞
	4		$	4	D	T	d	t	、	エ	ト	ヤ	μ	Ω
	5		%	5	E	U	e	u	・	オ	ナ	ユ	σ	ü
	6		&	6	F	V	f	v	ヲ	カ	ニ	ヨ	ρ	Σ
	7		'	7	G	W	g	w	ァ	キ	ヌ	ラ	g	π
	8		(	8	H	X	h	x	ィ	ク	ネ	リ	√	x̄
	9		)	9	I	Y	i	y	ゥ	ケ	ノ	ル	⁻¹	y
	A		*	:	J	Z	j	z	ェ	コ	ハ	レ	j	千
	B		+	;	K	[	k	{	ォ	サ	ヒ	ロ	ˣ	万
	C		,	<	L	¥	l	|	ャ	シ	フ	ワ	¢	円
	D		-	=	M	]	m	}	ュ	ス	ヘ	ン	£	÷
	E		.	>	N	^	n	→	ョ	セ	ホ	゛	ñ	
	F		/	?	O	_	o	←	ッ	ソ	マ	゜	ö	█

Appendix D
Using the C200H ID Sensor Unit with CS1-series PCs

Points of Caution

Note the following points when using the C200H-IDS01-V1 or C200H-IDS21 with a CS1-series PC.

1) Differences in I/O Bit and DM Area Allocation

- The beginning word, n, of the area allocated for I/O between the CPU Unit and the ID Sensor will change from n = 100 + (unit number × 10) to n = 2000 + (unit number × 10).
- The beginning word, m, of the area in the DM Area allocated to the ID Sensor will change from m = DM 1000 + (unit number × 100) to m = D20000 + (unit number × 100).

2) Command Storage Area and Read Data Receiving Area Specification

Specify the command storage area and read data receiving area for a CS1-series PC using the CIO Area (words n+2 and n+3) in the way shown below.

Command Storage Area/Read Data Receiving Area Specification

Area	Address to be specified (see note)	Specification method from CIO Area			
		Command data storage area address		Read data receiving area address	
		Area name n+2, bits 12 to 15 (1 digit, Hex)	Beginning word number n+2, bits 0 to 11 (3 digits, BCD)	Area name n+3, bits 12 to 15 (1 digit, Hex)	Beginning word number n+3, bits 0 to 11 (3 digits, BCD)
General-purpose DM Area	D00000 to D00999	0	0000 to 0999	0	0000 to 0999
DM Area for Special I/O Units	D20000 to D20999	1	0000 to 0999	1	0000 to 0999
I/O Area	0000 to 0246	2	0000 to 0246	2	0000 to 0246
Holding Area 1	H000 to H099	4	0000 to 0099	4	0000 to 0099
Holding Area 2	H107 to H122	6	0007 to 0022	6	0007 to 0022
Data Link Area	1000 to 1063	8	0000 to 0063	8	0000 to 0063
Timer Completion Flags	T0000 to T0511	A	0000 to 0511	A	0000 to 0511

Note It is not possible to specify any CS1 memory address other than the ones given in the above table.

Data Configuration

CIO Area

n = 2000 + (unit number × 10)

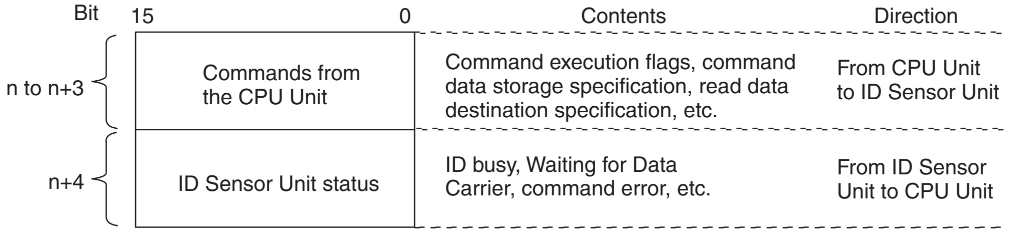
Bit
15
0
Contents
Direction
n to n+3
Commands from the CPU Unit
Command execution flags, command data storage specification, read data destination specification, etc.
From CPU Unit to ID Sensor Unit
n+4
ID Sensor Unit status
ID busy, Waiting for Data Carrier, command error, etc.
From ID Sensor Unit to CPU Unit

DM Area Allocation

Not used.

Setting Procedure

Hardware Settings

1. Set the unit number of the ID Sensor Unit using the rotary switch on the front of the Unit.
2. Mount on a CS1 CPU Rack, a C200H I/O Expansion Rack, a CS1 Expansion Rack, or a SYSMAC BUS Remote I/O Slave Rack. In a basic system, up to 10 Units can be mounted. (There are no restrictions on mounting order.)
3. Connect the Programming Device to the PC.
4. Turn on power to the PC.
5. Create an I/O table.

Initial Software Settings

Save command data to the area specified using word n+2 of the CIO Area.

Executing Commands

1. Set the number of command data words in word n+1 of the CIO Area.
2. Set the area name and the address for the area used to store command data in word n+2 of the CIO Area.
3. When using read commands, set the area name and the address for the area used to receive read data in word n+3 of the CIO Area.
4. Execute commands for the ID Sensor Unit by turning bit 00 of word n of the CIO Area from OFF to ON.

Programming

Executing Commands

1. Set the number of command data words (CIO Area, word n+1) and the command data storage area address (CIO Area, word n+2) using the MOV(021) instruction, with the normally closed condition of the ID Busy Flag (CIO Area, word n+4, bit 00) as an input condition. (When using a read command, also set the read data receiving area address (CIO Area, word n+3) using the MOV(021) instruction.)
2. Program a self-holding bit as one of the input conditions for the above MOV(021) instructions.
3. Turn ON the command execution flag (word n, bit 00) using the OUT instruction, with the normally open condition of the above self-holding bit as the input condition.

Program Example

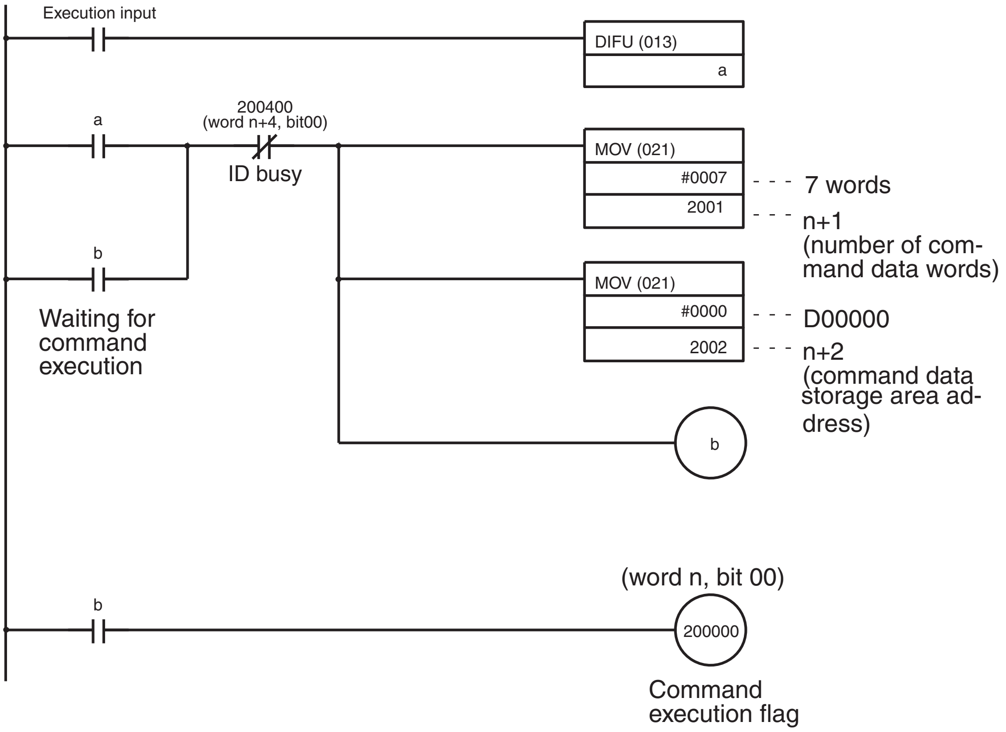
Execution input
DIFU (013)
a
a
200400
(word n+4, bit00)
ID busy
MOV (021)
#0007
2001
7 words
n+1
(number of command data words)
b
Waiting for command execution
MOV (021)
#0000
2002
D00000
n+2
(command data storage area address)
b
(word n, bit 00)
b
200000
Command execution flag

If input condition a is ON for one cycle and the ID Busy Flag is OFF, sets the number of command data words to 7.

At the same time, sets the command storage area beginning address to D00000.

Holds status until ID Sensor Unit starts executing the command

Example: DM Area used as command data storage area at the CPU Unit

Command data in CPU

15 ↔ 00

D00000	57	54	WT (Write)
D00001	48	31	H1 (Hexadecimal, Head 1)
D00002	00	06	Beginning address in which data is to be written in Data Carrier
D00003	10	11	Data to be written to Data Carrier, numbers 10 through 14 (5 bytes)
D00004	12	13	
D00005	14	2A	If the number of bytes to be written to the Data Carrier is odd, shift codes 2A and 0D forward one byte and write 00 into the last 8 bits.
D00006	0D	00	

Write is executed. →

Data to be written to Data Carrier

Address	7 ↔ 0
0006	10
0007	11
0008	12
0009	13
000A	14

Data cannot be written to write-protected areas.

Note Although the ID Busy flag normally turns OFF upon completion of the command, if the command execution flag is ON at this time, the ID Busy flag will stay ON. Therefore, design the program so that the command execution flag will be turned OFF when the ID Busy flag turns ON, as in the example.

Glossary

ASCII code	[A(merican) S(tandard) C(ode for) I(nformation) I(nterchange)] A standard computer code used to facilitate the interchange of information among various types of data-processing equipment.
Backplane	A base to which Units are mounted to form a Rack. Backplanes provide a series of connectors for these Units along with wiring to connect them to the CPU and Power Supply. Backplanes also provide connectors used for connection to other Backplanes. In some Systems, different Backplanes are used for different Racks; in other Systems, Racks differ only by the Units mounted to them.
backup	A copy of existing data which is valuable if the original data is accidentally erased.
bit	The smallest piece of information that can be represented on a computer. A bit has the value of either zero or one, corresponding to the electrical signals ON and OFF. A bit is one binary digit.
central processing unit	A device that is capable of storing a program and data, and executing the set of instructions contained in the program. In a PC System, the central processing unit executes the program, processes I/O signals, communicates with external devices, etc.
center displacement	In this manual, center displacement refers to the degree of misalignment of the center points of the Data Carrier and the Read/Write Head (or Antenna) at which data communication is still possible.
CPU	An acronym for central processing unit.
CPU Backplane	A Backplane used to create a CPU Rack.
CPU Rack	Part of a Rack PC, the CPU Rack contains the CPU, a Power Supply, and other Units.
Expansion I/O Unit	An I/O Unit for a Package-type PC that provides more I/O points to the PC.
flag	A bit that is turned ON and OFF automatically by the system in order to provide status information.
hexadecimal	A number system used to represent numbers in base 16 with digits 0,1,2...9,A,B...F.
Intelligent I/O Unit	A Unit, such as an ASCII Unit or Ladder Program I/O Unit, that is equipped with its own CPU and can be programmed.
I/O devices	The devices which are connected to the terminals on I/O Units, Special I/O Units, or Intelligent I/O Units. I/O devices may be part of the Control System if they function to help control other devices, or they may be part of the controlled system if they interact directly with it.
I/O Unit	The most basic type of Unit mounted to a Backplane. I/O Units include Input Units and Output Units, each of which is available in a range of specifications. I/O Units do not include Special I/O Units, Link Units, etc.
PC	An acronym for Programmable Controller.

Power Supply	A Unit that mounts to a Backplane in a Rack PC. It provides power at the voltage required by the other Units on the Rack.
Programmable Controller	A small, computerlike device that can control peripheral equipment, such as an electric door or quality control devices, based on programming and peripheral input devices. Any process that can be controlled using electrical signals can be controlled by a PC. PCs can be used independently or networked together into a system to control more complex operations.
register/registered	Storing text and graphics in the RAM/ROM card from a personal computer or the ASCII Unit. Graphics that have been written to the RAM/ROM card are referred to as registered messages.
Remote I/O Slave Rack	A Backplane to which is mounted a Remote I/O Slave Unit. This Rack can be located a considerable distance from the CPU Rack, with the only connection being a cable connecting the Slave to a Remote I/O Master Unit mounted on the CPU Rack or on an Expansion I/O Rack.
Remote I/O Slave Unit	A Remote I/O Unit that is accessed through a Remote I/O Master Unit.
Remote I/O Unit	A Unit that extends the distance an Expansion I/O Rack can be from the CPU.
RS-485 interface	An industry standard connector for serial communications.
scan time	The time the PC requires to perform internal operations such as resetting the watchdog timer, reading the program, receiving input data, sending output data, and executing instructions. Scan time is monitored by the watchdog timer within the PC. If scan time takes longer than specified, an error message may be generated, or the CPU may stop. Scan times differ according to the configuration of the system.
Special I/O Unit	A dedicated Unit that is designed for a specific purpose. Special I/O Units include Position Control Units, High-speed Counters, Analog I/O Units, etc.
system configuration	The arrangement in which Units in a System are connected. This term refers to the arrangement and wiring of all the devices needed to compose the System. In OMRON terminology, "system configuration" describes the arrangement and connection of the Units comprising a Control System that includes one or more PCs.
Unit	In OMRON PC terminology, the word Unit is capitalized to indicate any product sold for a PC System. Though most of the names of these products include the word Unit, this is not always so; for example, a Remote Terminal is referred to as a Unit. Context generally makes the meaning of this word clear.
word	In digital circuits, a group of bits. Usually a word consists of four, eight, or sixteen bits. In C-series PCs, a word consists of sixteen bits. Words can be used to store data, or they can be used for I/O.
work bits	Bits in the IR area that are not being used for input or output. These bits can be used in the program in any way desired.
write protection	Write protection is a means of ensuring that specified information written to the Data Carrier cannot be altered or erased.

Index

A

address page number, 56
  changing, 56
  setting, 57
address/data settings, 59
addresses
  setting, 60
applications
  precautions, xiii
ASCII code, 19–24
ASCII Code list, 83
Auto Read, 23, 44
Auto Read/Write Abort, 24, 45
Auto Write, 22

B

Backplane, 7
  C200H-IDS01-V1/IDS21, 6
Basic Assurance Test (BAT), 75
Binary Coded Decimal (BCD), 14
bit
  number, 14, 24
  Read/Write areas, 16
bit allocation, 14
buzzer, 55

C

Clear-all, 23
coefficient, 72
coefficient values, 72
command processing time, 70, 72
commands, 3
  communication
    Auto Read, 23
    Auto Read/Write Abort, 24
    Auto Write, 22
    Clear-all, 23
    Read, 21
    Write, 20
    write protection examples, 32
communication commands, 19
  writing to the Data Carrier, 18
compatibility, 3
Continuous Write, 64
CPU, 2, 6, 14, 24, 40–41, 52, 87
  communication with, 17
  reading data, 18
  writing to the Data Carrier, 18

D

Data Carrier
  address page number, 56
  registration of date of production, 36
  service life, 36
Data Carrier memory, 29
data setting, 61
date of production of Data Carrier, 36
  Clear-all command, 19
diagnostic flow charts, 75
Dimensions
  ID Sensor Unit C200H-IDS01-V1/IDS21, 77

E

error
  messages and reset flags, 16
  newest error information, 68
error information storage, 66
error log display, 66
error storage area, 16
errors, 12, 74
  error codes, 70
Expansion I/O Rack, 8

F

flag
  00 - 15, 15
  Command Error, 18–19
  Command Execution, 41, 43
  Data Carrier Waiting, 42
  error message, 16
  error reset, 14
  ID Busy, 18
  Read Format, 19

G–H

Glossary, 89

Handheld Programming Console, 3

Hardware
  - C200H-IDS01-V1
    - front panel, 5
  - C200H-IDS01-V1/S21
    - back panel, 6
  - C200H-IDS21
    - front panel, 5
  - indicators, 5

hexadecimal, 20–21, 23, 60

I

I/O refresh, 13

I/O Unit, Special, 8, 12–13, 16

ID Controller
  - V600/V620
    - compatibility, 3

ID Sensor Unit
  - modes, 52
  - replacement, 74

indicators and components, 5

installation
  - precautions, xiii

IR Bit allocation, 14

J–M

JOB function, 56

maintenance, 74

Mean Cycle Between Failures, 66, 69

monitor modes
  - MONITOR
    - functions and operation, 53

monitor test, 65

monitoring, 3, 51
  - address/data setting, 59
  - addresses
    - setting, 60
  - data setting, 61
  - READ, 59, 62
  - start and end addresses
    - selecting, 59
  - TEST, 59
  - WRITE 1, 59
  - WRITE 2, 59

N–O

newest error information, 66, 68
  - clearing, 66
  - key, 68

operating environment
  - precautions, xiii

P

PC Link Unit, 7–8

periodic maintenance, 74

Position Control Unit, 8

precautions
  - applications, xiii
  - general, xii
  - operating environment, xiii
  - safety, xii

production date
  - *See also* date of production

PROGRAM mode, 17

Programmable Controller, 2, 13
  - user program, 17

Programming
  - operation, 41

Programming Console
  - connecting, 51
  - keyboard sheet, 51
  - mode selector switch, 52
  - mode setting, 52
  - modes
    - MONITOR, 53
    - PROGRAM, 53
    - RUN, 53
  - MONITOR
    - initial display, 55
    - RESET display, 55

R

Read, 21

Read format error, 16

Read/Write bit areas, 16

registration of Data Carrier's date of production, 36

Remote I/O Communication Time, 72

Remote I/O Slave Rack, 8
  - communication time, 72

replacing the Unit, 74

returning an ID Sensor Unit, 74

S

safety precautions
  See also precautions
scan time, 19, 72
spare parts, 74
Special I/O Unit, 7
Specifications
  characteristics, 78
Standard Models, 81
start and end addresses
  selecting, 59
statistical error, 66
statistical error information, 69
  clearing, 67
Step Write, 63
storing error information, 3
Switch
  dip, 6
  Unit number, 5
switch
  DIP, 12
  unit number, 12
switch settings, 12
system
  description, 2
System Configuration
  C200H-IDS01-V1
    Electromagnetic Induction ID Sensor, 7
  C200H-IDS21
    Microwave ID Sensor Unit, 7
system configuration, 6
System Connections, 7
system connections
  diagram, 2
  mounting the ID Sensor Unit, 7
  Units on a Remote I/O Slave Rack, 7

T–W

time
  turnaround, 72
turnaround time, 72
unit number switch, 12
user program, 17
WDT
  See also watchdog timer
wiring, 8
Word
  settings, 13
word
  number, 14—15, 56, 69
word settings, 13
work bits, 13—14
Write, 20
write protection, 30, 32

Revision History

A manual revision code appears as a suffix to the catalog number on the front cover of the manual.

Cat. No. W153-E1-04

Revision code

The following table outlines the changes made to the manual during each revision. Page numbers refer to the previous version.

Revision code	Date	Revised content
1	February 1990	Original production
2	June 1993	W153-E1-1 was rewritten and reorganized using the text and format of W179-E1-1.
3	July 2000	**Front and Inside Front Cover:** “GUIDE” changed to “MANUAL.” **Page v:** Precautionary information added. **Page 2:** Minor additions made to graphic. **Pages 4, 15, 51:** Information on MD–S command added. **Page 4:** Information on maximum distances added. **Pages 14, 17:** “Command execution bit” changed to “command execution flag.” **Page 17:** “No. of command data bits” changed to “No. of command data words.” **Page 20:** Changes made to information on MD commands. **Page 29:** Information on management of overwriting operations added. **Page 37:** Change made to bottom paragraph. **Page 38:** Warnings added. **Page 40:** “10904” corrected to “10900” in graphic. **Pages 40 to 46:** Minor changes made to graphics. **Pages 41, 42, 43, 44, 45, 46, 48, 50, 52:** Changes made to operation explanations. **Page 89:** *Appendix D* added.
04	May 2003	**Page xii:** Added safety precautions. **Page 83:** Corrected command data storage address for DM Area for Special I/O Units. “n+5 to n+9” corrected to “n+4” in CIO Area data configuration diagram.

OMRON CORPORATION
FA Systems Division H.Q.
66 Matsumoto
Mishima-city, Shizuoka 411-8511
Japan
Tel: (81)55-977-9181/Fax: (81)55-977-9045

Regional Headquarters

OMRON EUROPE B.V.
Wegalaan 67-69, NL-2132 JD Hoofddorp
The Netherlands
Tel: (31)2356-81-300/Fax: (31)2356-81-388

OMRON ELECTRONICS LLC
1 East Commerce Drive, Schaumburg, IL 60173
U.S.A.
Tel: (1)847-843-7900/Fax: (1)847-843-8568

OMRON ASIA PACIFIC PTE. LTD.
83 Clemenceau Avenue,
#11-01, UE Square,
Singapore 239920
Tel: (65)6835-3011/Fax: (65)6835-2711

OMRON

Authorized Distributor:

Cat. No. W153-E1-04

Note: Specifications subject to change without notice.

Printed in Japan
0603-0.03M

Cat. No. W153-E1-04

SYSMAC C200H-IDS01-V1/IDS21 ID Sensor

OPERATION MANUAL

OMRON

Read and Understand this Manual

Please read and understand this manual before using the product. Please consult your OMRON representative if you have any questions or comments.

Warranty and Limitations of Liability

WARRANTY

OMRON's exclusive warranty is that the products are free from defects in materials and workmanship for a period of one year (or other period if specified) from date of sale by OMRON.

OMRON MAKES NO WARRANTY OR REPRESENTATION, EXPRESS OR IMPLIED, REGARDING NON-INFRINGEMENT, MERCHANTABILITY, OR FITNESS FOR PARTICULAR PURPOSE OF THE PRODUCTS. ANY BUYER OR USER ACKNOWLEDGES THAT THE BUYER OR USER ALONE HAS DETERMINED THAT THE PRODUCTS WILL SUITABLY MEET THE REQUIREMENTS OF THEIR INTENDED USE. OMRON DISCLAIMS ALL OTHER WARRANTIES, EXPRESS OR IMPLIED.

LIMITATIONS OF LIABILITY

OMRON SHALL NOT BE RESPONSIBLE FOR SPECIAL, INDIRECT, OR CONSEQUENTIAL DAMAGES, LOSS OF PROFITS OR COMMERCIAL LOSS IN ANY WAY CONNECTED WITH THE PRODUCTS, WHETHER SUCH CLAIM IS BASED ON CONTRACT, WARRANTY, NEGLIGENCE, OR STRICT LIABILITY.

In no event shall the responsibility of OMRON for any act exceed the individual price of the product on which liability is asserted.

IN NO EVENT SHALL OMRON BE RESPONSIBLE FOR WARRANTY, REPAIR, OR OTHER CLAIMS REGARDING THE PRODUCTS UNLESS OMRON'S ANALYSIS CONFIRMS THAT THE PRODUCTS WERE PROPERLY HANDLED, STORED, INSTALLED, AND MAINTAINED AND NOT SUBJECT TO CONTAMINATION, ABUSE, MISUSE, OR INAPPROPRIATE MODIFICATION OR REPAIR.

Application Considerations

SUITABILITY FOR USE

OMRON shall not be responsible for conformity with any standards, codes, or regulations that apply to the combination of products in the customer's application or use of the products.

At the customer's request, OMRON will provide applicable third party certification documents identifying ratings and limitations of use that apply to the products. This information by itself is not sufficient for a complete determination of the suitability of the products in combination with the end product, machine, system, or other application or use.

The following are some examples of applications for which particular attention must be given. This is not intended to be an exhaustive list of all possible uses of the products, nor is it intended to imply that the uses listed may be suitable for the products:

- Outdoor use, uses involving potential chemical contamination or electrical interference, or conditions or uses not described in this manual.
- Nuclear energy control systems, combustion systems, railroad systems, aviation systems, medical equipment, amusement machines, vehicles, safety equipment, and installations subject to separate industry or government regulations.
- Systems, machines, and equipment that could present a risk to life or property.

Please know and observe all prohibitions of use applicable to the products.

NEVER USE THE PRODUCTS FOR AN APPLICATION INVOLVING SERIOUS RISK TO LIFE OR PROPERTY WITHOUT ENSURING THAT THE SYSTEM AS A WHOLE HAS BEEN DESIGNED TO ADDRESS THE RISKS, AND THAT THE OMRON PRODUCTS ARE PROPERLY RATED AND INSTALLED FOR THE INTENDED USE WITHIN THE OVERALL EQUIPMENT OR SYSTEM.

PROGRAMMABLE PRODUCTS

OMRON shall not be responsible for the user's programming of a programmable product, or any consequence thereof.

Disclaimers

CHANGE IN SPECIFICATIONS

Product specifications and accessories may be changed at any time based on improvements and other reasons.

It is our practice to change model numbers when published ratings or features are changed, or when significant construction changes are made. However, some specifications of the products may be changed without any notice. When in doubt, special model numbers may be assigned to fix or establish key specifications for your application on your request. Please consult with your OMRON representative at any time to confirm actual specifications of purchased products.

DIMENSIONS AND WEIGHTS

Dimensions and weights are nominal and are not to be used for manufacturing purposes, even when tolerances are shown.

PERFORMANCE DATA

Performance data given in this manual is provided as a guide for the user in determining suitability and does not constitute a warranty. It may represent the result of OMRON's test conditions, and the users must correlate it to actual application requirements. Actual performance is subject to the OMRON Warranty and Limitations of Liability.

ERRORS AND OMISSIONS

The information in this manual has been carefully checked and is believed to be accurate; however, no responsibility is assumed for clerical, typographical, or proofreading errors, or omissions.